INTERNATIONAL STANDARD

ISO 11985

First edition
1997-12-15

Ophthalmic optics — Contact lenses — Ageing by exposure to UV and visible radiation (*in vitro* method)

Optique ophtalmique - Lentilles de contact - Vieillissement par exposition aux rayonnements UV et visible (méthode in vitro)

iTeh STANDARD PREVIEW
(standards.iteh.ai)

ISO 11985:1997
https://standards.iteh.ai/catalog/standards/sist/32e82d68-53e9-4095-a33b-385f72e4a851/iso-11985-1997

Foreword

ISO (the International Organization for Standardization) is a worldwide federation of national standards bodies (ISO member bodies). The work of preparing International Standards is normally carried out through ISO technical committees. Each member body interested in a subject for which a technical committee has been established has the right to be represented on that committee. International organisations, governmental and non-governmental, in liaison with ISO, also take part in the work. ISO collaborates closely with the International Electrotechnical Commission (IEC) on all matters of electrotechnical standardization.

Draft International Standards adopted by the technical committees are circulated to the member bodies for voting. Publication as an International Standard requires approval by at least 75 % of the member bodies casting a vote.

iTeh STANDARD PREVIEW

International Standard ISO 11985 was prepared by ISO/TC 172 *Optics and optical instruments*, Subcommittee SC 7, *Ophthalmic optics and instruments*.

(standards.iteh.ai)

ISO 11985:1997
https://standards.iteh.ai/catalog/standards/sist/32e82d68-53e9-4095-a33b-385f72e4a851/iso-11985-1997

© ISO 1997

All rights reserved. Unless otherwise specified, no part of this publication may be reproduced or utilized in any form or by any means, electronic or mechanical, including photocopying and microfilm, without permission in writing from the publisher.

International Organization for Standardization
Case postale 56 • CH-1211 Genève 20 • Switzerland
Internet central@iso.ch
X.400 c=ch; a=400net; p=iso; o=isocs; s=central

Printed in Switzerland

Ophthalmic optics — Contact lenses — Ageing by exposure to UV and visible radiation (*in vitro* method)

1 Scope

This International Standard describes an *in vitro* method which simulates the ageing of rigid (hard) and soft lenses in daylight.

The existence of this International Standard does not imply in any way that the testing of contact lenses for ageing by ultraviolet (UV) and visible radiation is a requirement.

2 Normative reference

iTeh STANDARD PREVIEW
(standards.iteh.ai)

The following standard contains provisions which, through reference in this text, constitute provisions of this International Standard. At the time of the publication, the edition indicated was valid. All standards are subject to revision, and parties to agreements based on this International Standard are encouraged to investigate the possibility of applying the most recent edition of the standard indicated below. Members of IEC and ISO maintain registers of currently valid International Standards.

ISO 11985:1997
https://standards.iteh.ai/catalog/standards/sist/32e82db8-53e9-4095-a33b-385f7264a851/iso-11985-1997

ISO 10344:1996, *Optics and optical instruments — Contact lenses — Saline solution for contact lens testing.*

3 Principle

One aspect of the ageing of contact lenses in normal use is simulated by exposure to an intense source of light.

4 Apparatus

4.1 High pressure xenon lamp, with a quartz envelope and with filters giving a spectral distribution corresponding to that of solar radiation.

NOTE 1 An example of such a lamp is shown in figure 1.

NOTE 2 High intensity UV sources present radiation hazards if not properly shielded and safety hazards if not properly maintained.

4.2 Infrared (IR) filter, with a transmittance of less than 50 % of the incident radiation in the range 650 nm to 850 nm.

NOTE — An example of the transmittance of an IR filter is shown in figure 2.

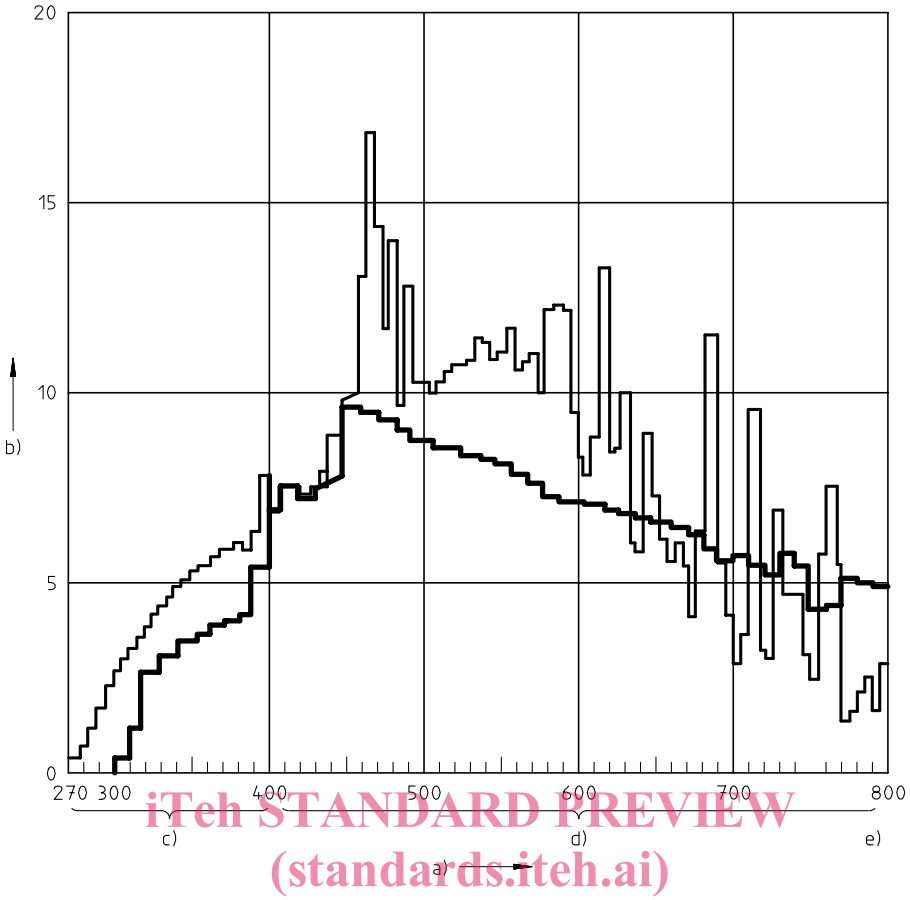

iTeh STANDARD PREVIEW
(standards.iteh.ai)

Xenon lamp spectrum

Global solar spectrum at sea level (D_{65} illuminant)

a) Wavelength, in nm

b) Spectral irradiance, in W/(m² · 5 nm)

c) UV

d) visible

e) IR

ISO 11985:1997
https://standards.iteh.ai/catalog/standards/sist/32e82d68-53e9-4095-a33b-385f72e4a851/iso-11985-1997

Figure 1 — Energy distribution

4.3 Ultraviolet (UV) filter, with a transmittance corresponding to solar radiation. The transmittance shall be 0 % below a wavelength of 290 nm and greater than 90 % between wavelengths of 380 nm and 750 nm.

NOTE — An example of the effect of such a UV filter is shown in figure 3.

4.4 Mirrors, two, capable of reflecting UV and visible radiation.

4.5 Radiation source, comprising a xenon lamp (4.1), IR filter (4.2), UV filter (4.3), mirrors (4.4) and parabolic reflector assembled as shown in figure 4.

Cuvette, manufactured from quartz and designed to hold contact lens(es). It shall be provided with a silicone rubber seal retained in position using a suitable clamp. When filled with standard saline solution (ISO 10344), the cuvette shall not absorb more than 2 % of incident radiation between the wavelengths 290 nm and 750 nm.

NOTE — Such an arrangement retaining two cuvettes is shown in figure 5.

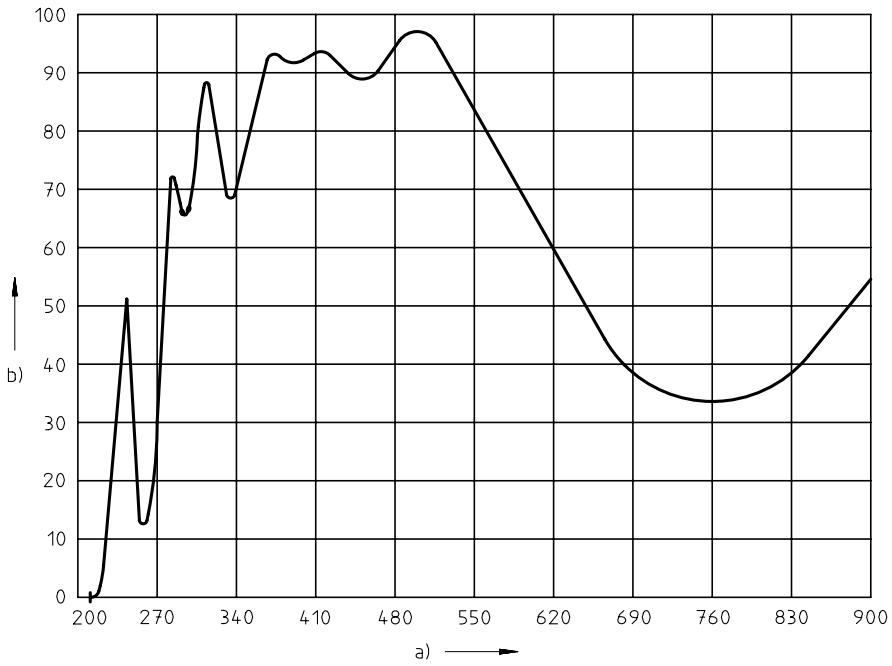

a) Wavelength, in nm
b) % Transmittance

Figure 2 — IR filter transmittance

iTeh STANDARD PREVIEW
(standards.iteh.ai)
ISO 11985:1997
https://standards.iteh.ai/catalog/standards/sist/32e82d68-53e9-4095-a33b-385f72e4a851/iso-11985-1997

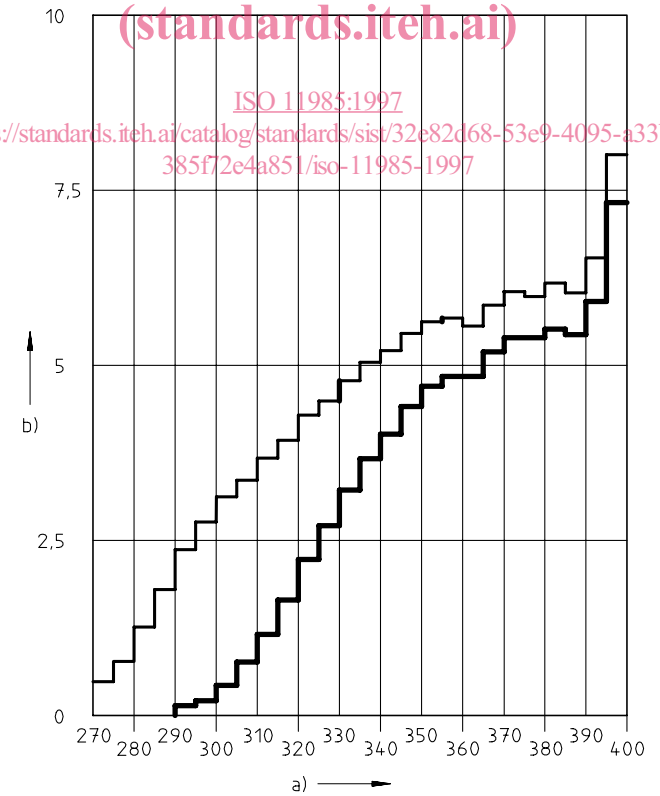

Without UV filter
With UV filter
a) Wavelength, in nm
b) Spectral irradiance, in W/(m^2 · 5 nm)

Figure 3 — UV domain of xenon lamp

Dimensions in millimetres

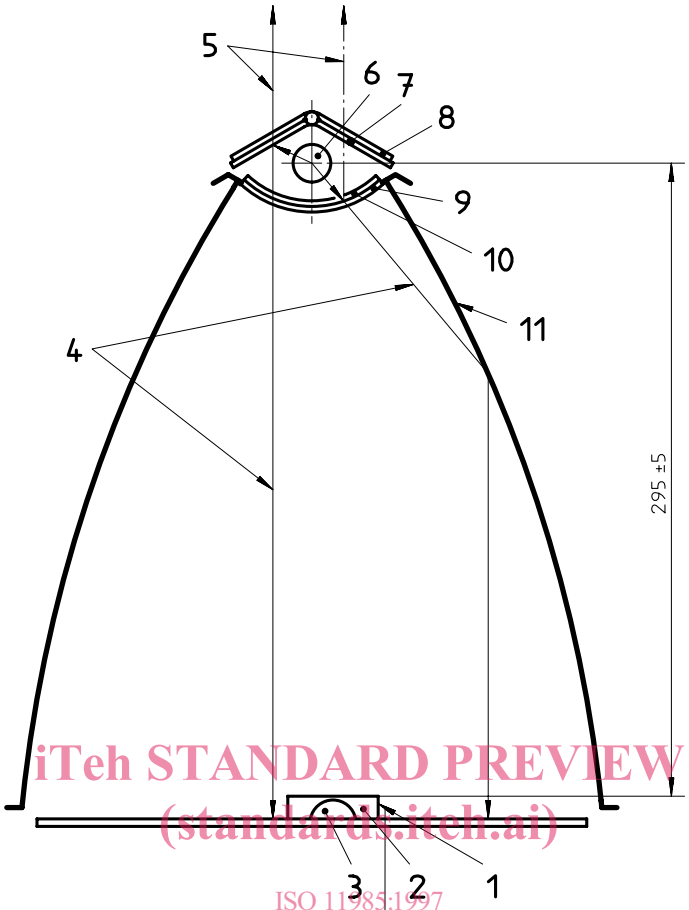

iTeh STANDARD PREVIEW
(standards.iteh.ai)
ISO 11985:1997
https://standards.iteh.ai/catalog/standards/sist/32e82d68-53e9-4095-a33b-385f72e4a851/iso-11985-1997

1 Cuvette (see cuvette assembly shown in figure 5)
2 Saline solution
3 Contact lens
4 UV - visible rays
5 IR rays
6 Xenon lamp
7 UV reflecting mirror
8 Visible reflecting mirror
9 IR filter
10 UV filter
11 Parabolic reflector

Figure 4 — Radiation source and apparatus

Dimensions in millimetres

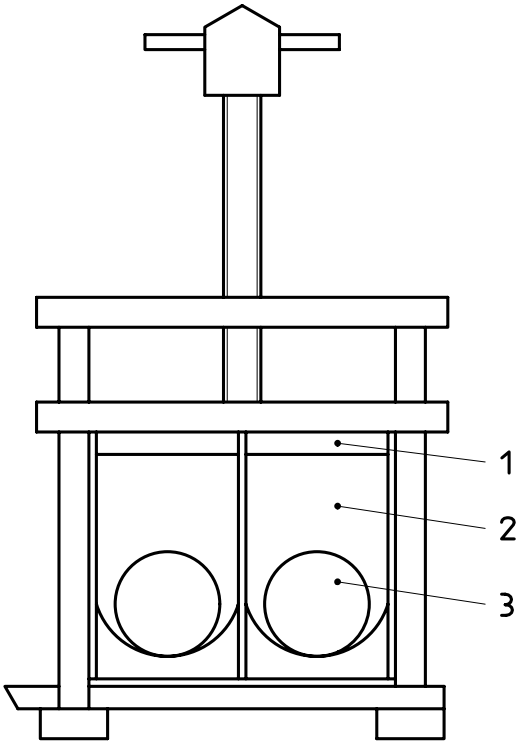

1 Silicone rubber seal
2 Saline solution
3 Contact lens

iTeh STANDARD PREVIEW
(standards.iteh.ai)
ISO 11985:1997
https://standards.iteh.ai/catalog/standards/sist/32e82d68-53e9-4095-a33b-385f72e4a851/iso-11985-1997

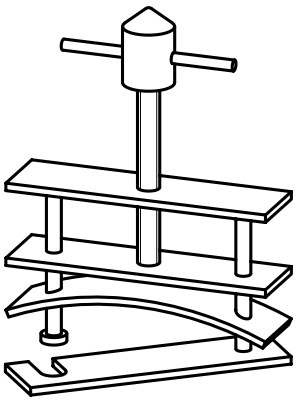

Cuvette holder

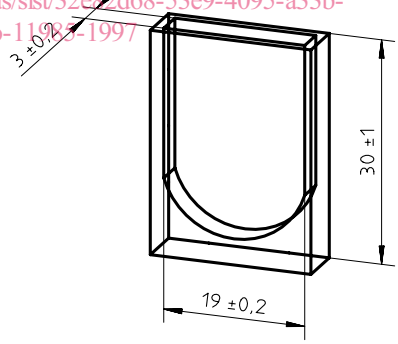

Cuvette

Figure 5 — Cuvette assembly

5 Samples

Take the new unused contact lenses from the normal production process. Ensure that no lens has been specially treated or conditioned prior to the test.

6 Procedure

6.1 Place one sample lens in each cuvette (4.6). Fill the cuvette with the saline solution conforming to ISO 10344. Place the silicone rubber seal on the tip of the cuvette. Ensure that there are no air bubbles. Fix the seal in position with the clamp.

6.2 Ensure that the total irradiance between 300 nm and 800 nm is 240 W/m^2 to 260 W/m^2 and that, if more than one lens is exposed simultaneously, each lens is subjected to the same irradiation. Ensure that the irradiation is essentially perpendicular to the surface on which the sample rests.

Expose the samples to the light source (see 4.5) at a distance of (295 $\pm$ 5) mm for $\left(20\ ^{+1}_{0}\right)$ h unless otherwise specified by the manufacturer. During the exposure, ensure that the temperature of the saline solution in the cuvette remains below 40 °C.

7 Test report

The test report shall contain at least the following information :

iTeh STANDARD PREVIEW
(standards.iteh.ai)

a) a reference to this International Standard, i.e. ISO 11985;

b) the identification of the contact lens submitted to the procedure;

c) the date of submission of the contact lens to the procedure.

ISO 11985:1997
https://standards.iteh.ai/catalog/standards/sist/32e82d68-53e9-4095-a33b-385f72e4a851/iso-11985-1997

iTeh STANDARD PREVIEW
(standards.iteh.ai)

ISO 11985:1997
https://standards.iteh.ai/catalog/standards/sist/32e82d68-53e9-4095-a33b-385f72e4a851/iso-11985-1997