INTERNATIONAL STANDARD

ISO 16287

First edition
2005-02-15

Plain bearings — Thermoplastic bushes — Dimensions and tolerances

Paliers lisses — Bagues thermoplastiques — Dimensions et tolérances

Reference number
ISO 16287:2005(E)

ISO copyright office
Case postale 56 • CH-1211 Geneva 20
Tel. + 41 22 749 01 11
Fax + 41 22 749 09 47
E-mail copyright@iso.org
Web www.iso.org

Published in Switzerland

Contents

Page

Foreword

ISO (the International Organization for Standardization) is a worldwide federation of national standards bodies (ISO member bodies). The work of preparing International Standards is normally carried out through ISO technical committees. Each member body interested in a subject for which a technical committee has been established has the right to be represented on that committee. International organizations, governmental and non-governmental, in liaison with ISO, also take part in the work. ISO collaborates closely with the International Electrotechnical Commission (IEC) on all matters of electrotechnical standardization.

International Standards are drafted in accordance with the rules given in the ISO/IEC Directives, Part 2.

The main task of technical committees is to prepare International Standards. Draft International Standards adopted by the technical committees are circulated to the member bodies for voting. Publication as an International Standard requires approval by at least 75 % of the member bodies casting a vote.

Attention is drawn to the possibility that some of the elements of this document may be the subject of patent rights. ISO shall not be held responsible for identifying any or all such patent rights.

ISO 16287 was prepared by Technical Committee ISO/TC 123, *Plain bearings*, Subcommittee SC 3, *Dimensions, tolerances and construction details*.

Plain bearings — Thermoplastic bushes — Dimensions and tolerances

1 Scope

This International Standard specifies the dimensions and tolerances for inserted thermoplastic bushes used as plain bearings with or without lubrication grooves in accordance with ISO 12128. These thermoplastic bushes are dimensionally exchangeable to wrapped bushes according to ISO 3547-1.

This International Standard is not applicable to reinforced plastics.

2 Normative references

The following referenced documents are indispensable for the application of this document. For dated references, only the edition cited applies. For undated references, the latest edition of the referenced document (including any amendments) applies.

ISO 286-1, *ISO system of limits and fits — Part 1: Bases of tolerance, deviations and fits*

ISO 554, *Standard atmospheres for conditioning and/or testing — Specifications*

ISO 3547-1, *Plain bearings — Wrapped bushes — Part 1: Dimensions*

ISO 3547-2:1999, *Plain bearings — Wrapped bushes — Part 2: Test data for outside and inside diameter*

ISO 6691, *Thermoplastics polymers for plain bearings — Classification and designation*

ISO 12128, *Plain bearings — Lubrication holes, grooves and pockets — Dimensions, types, designation and their application to bearing bushes*

ISO 12301, *Plain bearings — Quality control techniques and inspection of geometrical and material quality characteristics*

3 Symbols

B nominal width of bush

B_{fl} flange thickness

C_i inside chamfer

C_o outside chamfer

D_{fl} flange diameter

D_H nominal housing bore diameter

D_i nominal inside diameter of the bush

$D_{i,ch}$ inside diameter of the bush when inserted in a ring gauge middle H7

D_o nominal outside diameter of the bush

r radius for flange bushes

4 Dimensions

The dimensions and tolerances of the thermoplastic bushes are shown in Figures 1 and 2, according to whether cylindrical (type C) or flanged (type F), and given, in millimetres, in Tables 1, 2, 3 and 4. The surface finishes x and y represented in Figures 1 and 2 are given in Table 5.

For determination of the IT value (see ISO 286-1) of the coaxiality tolerance, the dimensions of D_o are applicable.

For determination of the IT value (ISO 286-1) of the axial run-out tolerance, the dimensions of D_{fl} are applicable.

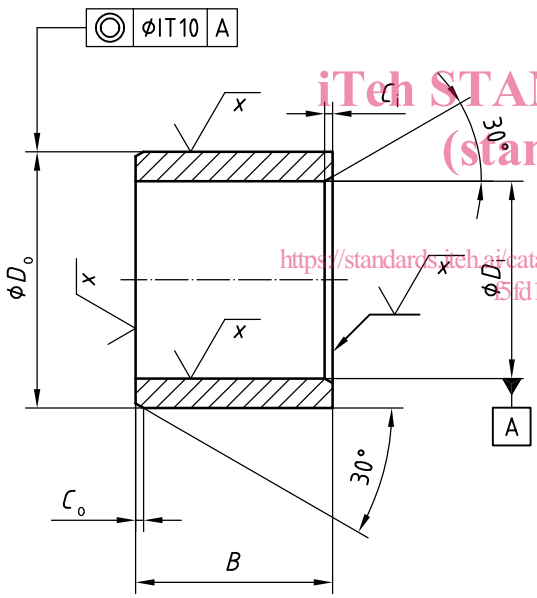

Figure 1 — Cylindrical bush

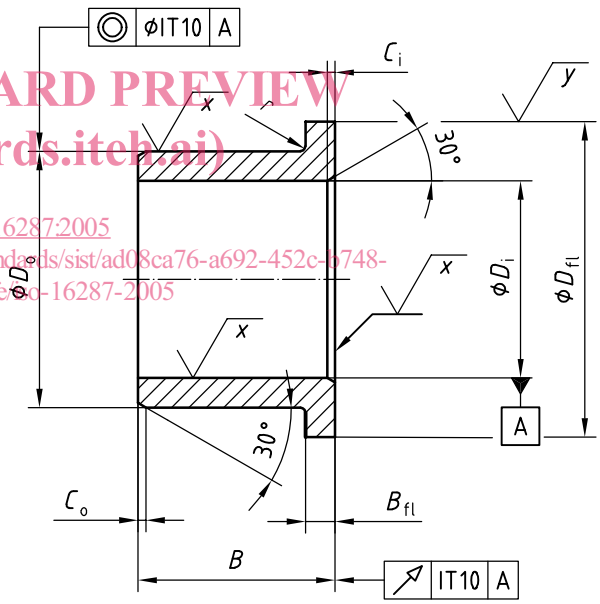

Figure 2 — Flanged bush

Table 1 — Nominal sizes and limits for thick-walled bushes type C and type F

D_i nom.	D_o nom.		D_o Limits for tolerance group (see Table 5) A	D_o Limits for tolerance group (see Table 5) B	D_{fl} h13	B_{fl} h13	B h13			C_i C_o max.	r max.
6	10	12	+0,21 +0,07	zb11	14	3	6	10	—	0,8	0,5
8	12	14			18	3	6	10	15	0,8	0,5
10	14	16	+0,27 +0,09		20	3	6	10	15	0,8	0,5
12	16	18			22	3	10	15	20	0,8	0,8
14	18	20			25	3	10	15	20	0,8	0,8
15	18	21	+0,33 +0,11		27	3	10	15	20	0,8	0,8
16	20	22			28	3	12	15	20	0,8	0,8
18	22	24			30	3	12	20	30	0,8	0,8
20	24	26	+0,45 +0,15		32	3	15	20	30	1,5	0,8
22	26	28			34	3	15	20	30	1,5	0,8
24	28	30			36	3	15	20	30	1,5	0,8
25	30	32			38	4	20	30	40	1,5	0,8
28	34	36	+0,60 +0,20		42	4	20	30	40	2	0,8
30	36	38			44	4	20	30	40	2	0,8
32	38	40			46	4	20	30	40	2	0,8
35	41	45	+0,69 +0,23		50	5	30	40	50	2	0,8
38	45	48			54	5	30	40	50	2	0,8
40	48	50			58	5	30	40	60	2	0,8
42	50	52	+0,90 +0,30		60	5	30	40	60	2	0,8
45	53	55			63	5	30	40	60	2,5	0,8
48	56	58			66	5	40	50	60	2,5	0,8
50	58	60			68	5	40	50	60	2,5	0,8
55	63	65			73	5	40	50	70	2,5	0,8
60	70	75	To be agreed		83	7,5	40	60	80	2,5	0,8
65	75	80			88	7,5	50	60	80	2,5	2
70	80	85			95	7,5	50	70	90	2,5	2
75	85	90			100	7,5	50	70	90	2,5	2
80	90	95			105	7,5	60	80	100	2,5	2
85	95	100			110	7,5	60	80	100	2,5	2
90	105	110		za11	120	10	60	80	120	2,5	2
95	110	115			125	10	60	100	120	2,5	2
100	115	120			130	10	80	100	120	2,5	2
105	120	125			135	10	80	100	120	2,5	2
110	125	130			140	10	80	100	120	2,5	2
120	135	140			150	10	100	120	150	2,5	2
130	145	150			160	10	100	120	150	3	2
140	155	160			170	10	100	150	180	3	2
150	165	170			180	10	120	150	180	3	2
160	180	185			200	12,5	120	150	180	3	2
170	190	195			210	12,5	120	180	200	3	2
180	200	210			220	15	150	180	250	3	2
190	210	220			230	15	150	180	250	3	2
200	220	230			240	15	180	200	250	3	2

Table 2 — Nominal sizes and limits for thin-walled cylindrical bushes type C

D_i	D_o			B						C_i C_o
		Limits for tolerance group (see Table 5)								
nom.	nom.	A	B	h13						max.
6	8	+0,21 +0,07	zb11	4	6	8	10			0,8
8	10			6	8	10	12	15		0,8
10	12	+0,27 +0,09		6	8	10	12	15	20	0,8
12	14			8	10	12	15	20	25	0,8
14	16			10	12	15	20	25		0,8
15	17	+0,33 +0,11		10	12	15	20	25		0,8
16	18			10	12	15	20	25		0,8
18	20			10	15	20	25			0,8
20	23	+0,45 +0,15		10	15	20	25	30		1,5
22	25				15	20	25	30		1,5
24	27				15	20	25	30		1,5
25	28				15	20	25	30	50	1,5
28	32	+0,60 +0,20			15	20	25	30		2
30	34			10	15	20	25	30	40	2
32	36			20	30	40				2
35	39	+0,69 +0,23		20	30	35	40	50		2
38	42			20	30	40				2
40	44			20	30	40	50			2
45	50	+0,90 +0,30		20	30	40	45	50		2,5
50	55			20	30	40	50	60		2,5
55	60			20	30	40	50	60		2,5
60	65	To be agreed		20	30	40	50	60	70	2,5
65	70			30	50	70				2,5
70	75			30	40	50	70			2,5
75	80				40	60	80			2,5
80	85				40	60	80	100		2,5
85	90			30	40	60	80	100		2,5
90	95		za11	40	60	100				2,5
95	100				60	100				2,5
100	105			50	60	100	115			2,5
105	110			60	100	105				2,5
110	115			60	100	115				2,5
115	120			60	100					2,5
120	125			60	100					2,5
125	130			60	100					2,5
130	135			60	100					3
135	140			60	100					3
140	145			60	100					3
150	155			60	100					3

Table 3 — Nominal sizes and limits for thin-walled flanged bushes type F

D_i	D_o			D_{fl}	B_{fl}	B			C_i / C_o	r
		Limits for tolerance group (see Table 5)								
nom.	nom.	A	B	d13	h13	h13			max.	max.
6	8	+0,21 +0,07	zb11	12	1	6	10		0,8	0,5
8	10			15	1	6	10	15	0,8	0,5
10	12	+0,27 +0,09		18	1	6	10	15	0,8	0,5
12	14			20	1	10	15	20	0,8	0,8
14	16			22	1	10	15	20	0,8	0,8
15	17	+0,33 +0,11		23	1	10	15	20	0,8	0,8
16	18			24	1	12	15	20	0,8	0,8
18	20			26	1	12	20	30	0,8	0,8
20	23	+0,45 +0,15		30	1,5	15	20	30	1,5	0,8
22	25			31	1,5	15	20	30	1,5	0,8
24	27			34	1,5	15	20	30	1,5	0,8
25	28			35	1,5	20	30	40	1,5	0,8
28	32	+0,60 +0,20		39	2	20	30	40	2	0,8
30	34			42	2	20	30	40	2	0,8
32	36			44	2	20	30	40	2	0,8
35	39	+0,69 +0,23		47	2	30	40	50	2	0,8
38	42			50	2	30	40	50	2	0,8
40	44			53	2	30	40	60	2	0,8
42	47	+0,90 +0,30		55	2,5	30	40	60	2	0,8
45	50			58	2,5	30	40	60	2,5	0,8
48	53			62	2,5	40	50	60	2,5	0,8
50	55			65	2,5	40	50	60	2,5	0,8
55	60			70	2,5	40	50	70	2,5	0,8
60	65	To be agreed		75	2,5	40	60	80	2,5	0,8
65	70			80	2,5	50	60	80	2,5	2
70	75			85	2,5	50	70	90	2,5	2
75	80			90	2,5	50	70	90	2,5	2
80	85			95	2,5	60	80	100	2,5	2
85	90			100	2,5	60	80	100	2,5	2
90	95		za11	110	2,5	60	80	120	2,5	2
95	100			115	2,5	60	100		2,5	2
100	105			120	2,5	80	100	120	2,5	2
105	110			125	2,5	80	100		2,5	2
110	115			130	2,5	80	100	120	2,5	2
120	125			140	2,5	100			2,5	2
130	135			150	2,5	100			3	2
140	145			160	2,5	100			3	2
150	155			170	2,5	100			3	2