ETSI TS 186 020 V2.1.1 (2009-12)

Technical Specification

Telecommunications and Internet converged Services and Protocols for Advanced Networking (TISPAN); IMS-based IPTV interoperability test specification

iTeh STANDARD PREVIEW
(standards.iteh.ai)
Full standard:
https://standards.iteh.ai/catalog/standards/sist/8ab1dd99-a198-431c-99dc-abd95c1e0f90/etsi-ts-186-020-v2.1.1-2009-12

Reference
DTS/TISPAN-06054-NGN-R2

Keywords
testing, interoperability, IP, TV, IMS

ETSI

650 Route des Lucioles
F-06921 Sophia Antipolis Cedex - FRANCE

Tel.: +33 4 92 94 42 00 Fax: +33 4 93 65 47 16

Siret N° 348 623 562 00017 - NAF 742 C
Association à but non lucratif enregistrée à la
Sous-Préfecture de Grasse (06) N° 7803/88

iTeh STANDARD PREVIEW
(standards.iteh.ai)
Full standard:
https://standards.iteh.ai/catalog/standards/sist/8an1dd99-a498-431c-99dc-a4d95c1e0f90/etsi-ts-186-020-v2.1.1-2009-12

Important notice

Individual copies of the present document can be downloaded from:
http://www.etsi.org

The present document may be made available in more than one electronic version or in print. In any case of existing or perceived difference in contents between such versions, the reference version is the Portable Document Format (PDF). In case of dispute, the reference shall be the printing on ETSI printers of the PDF version kept on a specific network drive within ETSI Secretariat.

Users of the present document should be aware that the document may be subject to revision or change of status. Information on the current status of this and other ETSI documents is available at
http://portal.etsi.org/tb/status/status.asp

If you find errors in the present document, please send your comment to one of the following services:
http://portal.etsi.org/chaircor/ETSI_support.asp

Copyright Notification

No part may be reproduced except as authorized by written permission.
The copyright and the foregoing restriction extend to reproduction in all media.

© European Telecommunications Standards Institute 2009.
All rights reserved.

DECT™, **PLUGTESTS**™, **UMTS**™, **TIPHON**™, the TIPHON logo and the ETSI logo are Trade Marks of ETSI registered for the benefit of its Members.
3GPP™ is a Trade Mark of ETSI registered for the benefit of its Members and of the 3GPP Organizational Partners.
LTE™ is a Trade Mark of ETSI currently being registered
for the benefit of its Members and of the 3GPP Organizational Partners.
GSM® and the GSM logo are Trade Marks registered and owned by the GSM Association.

Contents

Intellectual Property Rights 5
Foreword 5
1 Scope 6
2 References 6
2.1 Normative references 6
2.2 Informative references 7
3 Abbreviations 7
4 IMS-based IPTV Interoperability Test Specification 8
4.1 Introduction 8
4.2 Test Prerequisites 8
4.2.1 IP Version and protocols 8
4.2.1.1 IP 8
4.2.1.2 RTSP 8
4.2.1.3 SIP 8
4.2.1.4 IGMP 8
4.2.1.5 Media transport 8
4.2.2 Authentication and Security 9
4.2.2.1 SIP 9
4.2.2.2 HTTP 9
4.2.3 Supported Options 9
4.2.3.1 Signalling Compression 9
4.2.3.2 SIP Provisional Message Reliability 9
4.2.3.3 SIP precondition option tag 9
4.2.3.4 SIP timer option tag (Session Timers) 9
4.2.4 Content related options 9
4.2.4.1 Encrypted contents 9
4.2.4.2 Digital Rights Management 9
4.2.4.3 FEC 9
4.2.5 Service discovery 9
4.2.6 Miscellaneous 10
4.2.6.1 Network Address Translation (NAT) and Firewall function 10
4.3 Test Architecture 10
4.3.1 IPTV Nodes 11
4.3.1.1 Core IMS 11
4.3.1.1.1 Relevant Reference Points 11
4.3.1.1.2 Node Configuration 11
4.3.1.2 IPTV aware UE 11
4.3.1.2.1 Relevant Reference Points 11
4.3.1.2.2 Node Configuration 11
4.3.1.3 IPTV Application Server (AS) 11
4.3.1.3.1 Relevant Reference Points 11
4.3.1.3.2 Node Configuration 11
4.3.1.4 Content on Demand Server (CoDS) 11
4.3.1.4.1 Relevant Reference Points 12
4.3.1.4.2 Node Configuration 12
4.3.1.5 Personal Video Recorder Server (PVRS) 12
4.3.1.5.1 Relevant Reference Points 12
4.3.1.5.2 Node Configuration 12
4.3.1.6 Transport and Access (T&A) 12
4.3.1.7 Relevant Reference Points 12
4.3.1.8 Node Configuration 12
4.3.2 External Nodes 12
4.3.2.1 TV Head End 12
4.3.2.2 Relevant Reference Points 12

iTeh STANDARD PREVIEW
(standards.iteh.ai)
Full standard:
https://standards.iteh.ai/catalog/standards/sist/8ab1dd09-a198-4b1c-99dc-abd95c1e0f90/etsi-ts-186-020-v2.1.1-2009-12

4.3.2.2.1 Node Configuration 13
4.3.3 Summary of interfaces and protocols 13
4.3.4 Method 1 and Method 2 13
4.4 Test Descriptions 13
4.4.1 Service Attachment, Service Discovery and Selection 14
4.4.1.1 Manual configuration of SSF information in pull mode 14
4.4.2.1 Automatic provisioning of SSF in pull mode 15
4.4.2.2 Automatic provisioning of SSF in push mode 16
4.4.2 Broadcast TV 17
4.4.2.1 Session initiation without RACS 17
4.4.2.2 Channel Zapping without RACS 18
4.4.2.3 Session termination without RACS 19
4.4.2.4 Session initiation with RACS 19
4.4.2.5 Channel Zapping with RACS 20
4.4.2.6 Session termination with RACS 21
4.4.3 Broadcast TV with trick-play using Method 1 22
4.4.3.1 Initiate trick-play on a live broadcast channel 22
4.4.3.2 Play in trick-play mode 23
4.4.3.3 Simple fast forward trick-play 24
4.4.3.4 Fast backward trick-play to beginning of recorded content 25
4.4.3.5 Fast forward to move from trick-play to live broadcast mode 26
4.4.4 Broadcast TV with trick-play using Method 2 27
4.4.4.1 Initiate trick-play on a live broadcast channel 27
4.4.4.2 Play in trick-play mode 29
4.4.4.3 Simple fast forward trick-play 30
4.4.4.4 Fast backward trick-play to beginning of recorded content 31
4.4.4.5 Fast forward to move from trick-play to live broadcast mode 32
4.4.5 Content on Demand (CoD) using Method 1 33
4.4.5.1 Start CoD 33
4.4.5.2 Pause CoD with trick-play 35
4.4.5.3 Play CoD in trick-play mode 35
4.4.5.4 Simple fast forward of CoD using trick-play 36
4.4.5.5 Simple fast backward on CoD using trick-play 37
4.4.5.6 Jump to specific location in CoD content 37
4.4.5.7 Quit watching CoD 38
4.4.5.8 Resume CoD 39
4.4.5.9 CoD termination by IPTV AS 40
4.4.5.10 End of CoD 41
4.4.6 Video on Demand (CoD) using Method 2 42
4.4.6.1 Start CoD 42
4.4.6.2 Pause CoD with trick-play 45
4.4.6.3 Play CoD with trick-play 45
4.4.6.4 Fast forward CoD using trick-play 46
4.4.6.5 Fast backward CoD using trick-play 47
4.4.6.6 Jump to specific location in CoD content 48
4.4.6.7 Terminate CoD 49
4.4.6.8 Resume CoD 51
4.4.6.9 CoD termination by IPTV AS 54
4.4.6.10 CoD termination at the end of stream 55
4.4.7 NPVR using Method 1 56
4.4.7.1 Impulsive recording request 56
4.4.7.2 Scheduled recording request 57
4.4.7.3 Watching a recorded nPVR content 59
4.4.8 NPVR - Method 2 60
4.4.8.1 Impulsive recording request 60
4.4.8.2 Scheduled recording request 61
4.4.8.3 Watching a recorded content 62

Annex A (informative): Bibliography 66

History 67

iTeh STANDARD PREVIEW
(standards.iteh.ai)
Full standard:
https://standards.iteh.ai/catalog/standards/sist/8ab1dd99-a198-431c-99dc-abd95c1e0f90/etsi-ts-186-020-v2.1.1-2009-12

Intellectual Property Rights

IPRs essential or potentially essential to the present document may have been declared to ETSI. The information pertaining to these essential IPRs, if any, is publicly available for **ETSI members and non-members**, and can be found in ETSI SR 000 314: *"Intellectual Property Rights (IPRs); Essential, or potentially Essential, IPRs notified to ETSI in respect of ETSI standards"*, which is available from the ETSI Secretariat. Latest updates are available on the ETSI Web server (http://webapp.etsi.org/IPR/home.asp).

Pursuant to the ETSI IPR Policy, no investigation, including IPR searches, has been carried out by ETSI. No guarantee can be given as to the existence of other IPRs not referenced in ETSI SR 000 314 (or the updates on the ETSI Web server) which are, or may be, or may become, essential to the present document.

Foreword

This Technical Specification (TS) has been produced by ETSI Technical Committee Telecommunications and Internet converged Services and Protocols for Advanced Networking (TISPAN).

iTeh STANDARD PREVIEW
(standards.iteh.ai)
Full standard:
https://standards.iteh.ai/catalog/standards/sist/8ab1dd99-a198-431c-99dc-abd95c1e0f90/etsi-ts-186-020-v2.1.1-2009-12

1 Scope

The present document specifies interoperability tests for IMS-based IPTV system for NGN Release 2. It covers the use of main IPTV functionality via different methods. Interoperability test descriptions have been specified following the ETSI IPT test specification framework described in EG 202 568 [i.1] and interoperability testing methodology defined in EG 202 237 [i.2], i.e. interoperability testing with a conformance relation. Each interoperability test description includes an end user test sequence as well as a table for checking of high level message flows at key standardized reference points in the TISPAN IMS-based IPTV infrastructure [1] and [2].

2 References

References are either specific (identified by date of publication and/or edition number or version number) or non-specific.

- For a specific reference, subsequent revisions do not apply.
- Non-specific reference may be made only to a complete document or a part thereof and only in the following cases:
  - if it is accepted that it will be possible to use all future changes of the referenced document for the purposes of the referring document;
  - for informative references.

Referenced documents which are not found to be publicly available in the expected location might be found at http://docbox.etsi.org/Reference.

NOTE: While any hyperlinks included in this clause were valid at the time of publication ETSI cannot guarantee their long term validity.

iTeh STANDARD PREVIEW
(standards.iteh.ai)
Full standard:
https://standards.iteh.ai/catalog/standards/sist/8ab1dd09-a198-4d1c-89dc-abd95c1e0f90/etsi-ts-186-020-v2.1.1-2009-12

2.1 Normative references

The following referenced documents are indispensable for the application of the present document. For dated references, only the edition cited applies. For non-specific references, the latest edition of the referenced document (including any amendments) applies.

[1] ETSI TS 182 027 (V2.4.1): "Telecommunications and Internet converged Services and Protocols for Advanced Networking (TISPAN); IPTV Architecture; IPTV functions supported by the IMS subsystem".

[2] ETSI TS 183 063 (V2.4.2): "Telecommunications and Internet converged Services and Protocols for Advanced Networking (TISPAN); IMS-based IPTV stage 3 specification".

[3] IETF RFC 2326: "Real Time Streaming Protocol (RTSP)".

[4] IETF RFC 3261: " SIP: Session Initiation Protocol".

[5] ETSI TS 102 034: "Digital Video Broadcasting (DVB); Transport of MPEG-2 TS Based DVB Services over IP Based Networks".

[6] IETF RFC 3376: "Internet Group Management protocol, Version 3".

[7] IETF RFC 2616: "Hypertext Transfer Protocol - HTTP/1.1".

[8] ETSI TS 183 048: "Telecommunications and Internet converged Services and Protocols for Advanced Networking (TISPAN); Resource and Admission Control System (RACS); Protocol Signalling flows specification; RACS Stage 3".

[9] ETSI TS 183 017 (V2.3.1): "Telecommunications and Internet converged Services and Protocols for Advanced Networking (TISPAN); Resource and Admission Control: DIAMETER protocol for session based policy set-up information exchange between the Application Function (AF) and the Service Policy Decision Function (SPDF); Protocol specification".

[10] ETSI TS 102 539: "Digital Video Broadcasting (DVB); Carriage of Broadband Content Guide (BCG) information over Internet Protocol (IP)".

[11] ETSI TS 102 323: "Digital Video Broadcasting (DVB); Carriage and signalling of TV-Anytime information in DVB transport streams".

2.2 Informative references

The following referenced documents are not essential to the use of the present document but they assist the user with regard to a particular subject area. For non-specific references, the latest version of the referenced document (including any amendments) applies.

[i.1] ETSI EG 202 568: "Methods for Testing and Specification (MTS); Internet Protocol Testing (IPT); Testing: Methodology and Framework".

[i.2] ETSI EG 202 237: "Methods for Testing and Specification (MTS); Internet Protocol Testing (IPT); Generic approach to interoperability testing".

[i.3] K. Taniguchi and K. Ishikawa: "MSF IMS-based IPTV Test Plan for GMI 2008", Multi Service Forum (MSF) contribution 2008.169.06.

3 Abbreviations

For the purposes of the present document, the following abbreviations apply:

3GPP	3rd Generation Partnership Project
A-RACS	Access - Resource and Admission Control Subsystem
AAA	AA-Answer
AAR	AA-Request
AS	(IMS) Application Server
BC	Broadcast
CF	(Test) Configuration
CoD	Content On Demand
CoDS	Content on Demand Server
CSCF	Call Session Control Function
EPG	Electronic Program Guide
FEC	Forward Error Correction
I-CSCF	Interrogating CSCF
IGMP	Internet Group Management Protocol
IMS	IP Multimedia Subsystem
IP	Internet Protocol
IP EN	IP Edge Node
IPTV	Internet Protocol Television
MCF	Media Control Function
MDF	Media Delivery Function
MLD	Multicast Listener Discovery
nPVR	network-side Personal Video Recorder
P-CSCF	Proxy CSCF
PO	Point of Observation
PVRS	Personal Video Recorder Server
RCEF	Resource Control Enforcement Function
RTSP	Real Time Streaming Protocol
S-CSCF	Serving CSCF
SIP	Session Initiation Protocol
SDP	Session Description Protocol

iTeh STANDARD PREVIEW
(standards.iteh.ai)
Full standard:
https://standards.iteh.ai/catalog/standards/sist/8ab4dd99-a198-431c-99dc-ab895c1e0f60/etsi-ts-186-020-v2.1.1-2009-12

SCF	Service Control Function
SDF	Service Discovery Function
SPDF	Service-based Policy Decision Function
SSF	Service Selection Function
STA	Session-Termination-Answer
STR	Session-Termination-Request
T&A	Transport and Access
TCP	Transmission Control Protocol
TD	Test Description
TISPAN	Telecommunications and Internet converged Services and Protocols for Advanced Networking
UE	User Equipment
UPSF	User Profile Server Function
URI	Uniform Record Identifier

4 IMS-based IPTV Interoperability Test Specification

4.1 Introduction

The IMS-based IPTV interoperability test descriptions (TDs) defined in the following clauses are mainly derived from MSF 2008.169.06 [i.3], TS 183 063 [2] and TS 182 027 [1]. More specifically, these TDs focus on SIP/SDP [5], HTTP [7], RTSP [4], IGMP [6] related messaging procedures without RACS described in clauses 5, 6, 7, 8 and 11 of TS 183 063 [2]. TDs where RACS is involved are described in part in TS 183 048 [8].

The use of FLUTE and DVBSTP transport protocols on Xa reference point as well as IPv6 MLD are at this point not within the scope of the present document.

iTeh STANDARD PREVIEW
(standards.iteh.ai)
Full standard:
https://standards.iteh.ai/catalog/standards/sist/3a1dd99a198-431c-99dc-abd95c1e0f90/etsi-ts-186-020-v2-1-1-2009-12

4.2 Test Prerequisites

4.2.1 IP Version and protocols

4.2.1.1 IP

The present document assumes that IP-based protocols all use IPv4.

4.2.1.2 RTSP

The present document assumes RTSP [3] messages are sent only via TCP.

4.2.1.3 SIP

The present document assumes that all SIP [4] messages are sent via UDP to ensure retransmission procedures based on SIP only and to simplify the match procedure between the message flows and real network capture.

4.2.1.4 IGMP

The present document assumes that IPTV aware UE requests for multicast group use IGMPv3 [6].

4.2.1.5 Media transport

The present document assumes that content is transported using one of the following transport technologies: MPEG2TS encapsulation or direct RTP transport (e.g. H264 over RTP). Further it is assumed that transport of IPTV content within MPEG2-TS layer over RTP and UDP is performed according the procedures defined in TS 102 034 [5].

4.2.2 Authentication and Security

4.2.2.1 SIP

The present document assumes that no SIP-based authentication is performed.

4.2.2.2 HTTP

Personalized service selection is out of the scope of the document. Hence, no HTTP authentication is required from the UE toward SSF or SCF. Also no authentication proxy is needed between the UE and the SCF.

4.2.3 Supported Options

4.2.3.1 Signalling Compression

"No SigComp" is the default signalling configuration in all test descriptions. Tests may be executed with signalling compression if the required nodes support it.

4.2.3.2 SIP Provisional Message Reliability

The present document assumes there is no use of SIP 100rel option tag.

4.2.3.3 SIP precondition option tag

The present document assumes there is no use of SIP precondition option tag.

4.2.3.4 SIP timer option tag (Session Timers)

The present document assumes there is use of SIP timer option tag which supports session timer extension. The inclusion of this option tag in a Supported header field of a SIP request or response indicates that the UE is capable of performing refreshes. The inclusion of this option tag in a Require header of a SIP request indicates that the IMS core network should understand the session timer extension to process the request. Its inclusion in a Require header field of a SIP response indicates that the UE should look for the Session-Expires header field in the response and process it according to [4].

4.2.4 Content related options

4.2.4.1 Encrypted contents

The present document assumes that encryption is not used for CoD or BC content provisioning.

4.2.4.2 Digital Rights Management

The present document assumes DRM is not used for CoD or BC content provisioning.

4.2.4.3 FEC

The present document assumes that FEC disabled for CoD and BC content provisioning.

4.2.5 Service discovery

Service discovery should follow the procedures defined in TS 102 539 [10] and TS 102 323 [11].

iTeh STANDARD PREVIEW
(standards.iteh.ai)
Full standard:
https://standards.iteh.ai/catalog/standards/sist/8ab1dd99-e198-431c-99fc-abd55c1e0f90/etsi-ts-186-020-v2.1.1-2009-12

4.2.6 Miscellaneous

4.2.6.1 Network Address Translation (NAT) and Firewall function

The present document assumes there is neither NAT nor Firewall function activated.

4.3 Test Architecture

In figure 1, various nodes of an IMS-based IPTV system that pertain to testing are introduced. For each node configuration is described and relevant points of observation (POs) are identified. Based on these nodes a static test architecture is defined. Figure 1 shows the abstract test architecture of an IMS-based IPTV system based on the general IPTV architecture defined in [2], [8] and [9].

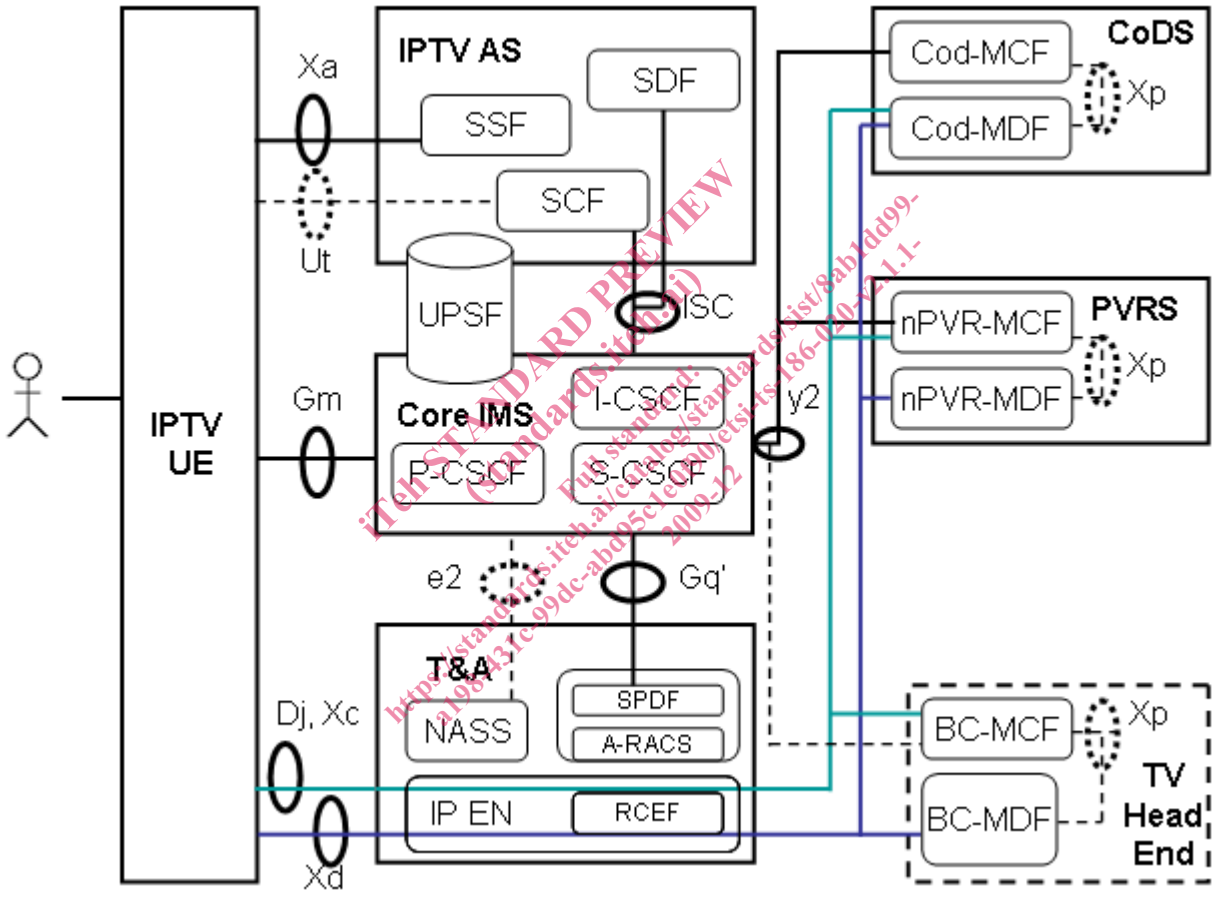

Figure 1: IMS-based IPTV test architecture (referred as CF_IMS_IPTV)

In figure 1, each node groups different IPTV logical functions. Interfaces within each node are considered internal and not taken into account in conformance criteria. It may however be of interest to also monitor these internal interfaces for debugging purposes.

Reference points (Ut, e2 and y2 towards BC-MCF) in dotted line are not in the scope of the present document.

NOTE: In a real IMS-based IPTV system some of the nodes shown in Figure 1 may also be collocated in the same equipment. In this case it is however still assumed that their connecting interfaces are still available for monitoring purposes

Each node framed with a solid line is considered an Equipment under Test (EUT) in the context of the ETSI interoperability testing methodology [i.2]. The collection of all EUTs makes up the System Under Test (SUT). Dashed nodes indicate other equipment, i.e. support nodes, required to execute at least some of the tests. The latter nodes are considered not to be part of the SUT.

iTeh STANDARD PREVIEW (standards.iteh.ai) Full standard: https://standards.iteh.ai/catalog/standards/sist/8ab1dd99-a198-431c-99dc-abd95c1e0f90/etsi-ts-186-020-v2.1.1-2009-12

4.3.1 IPTV Nodes

4.3.1.1 Core IMS

This node contains P-CSCF, I-CSCF and S-CSCF functions as well as potentially (a part of) the UPSF.

4.3.1.1.1 Relevant Reference Points

The Gm reference point between the IMS Core and the IP aware UE is used as a point of observation (PO) for testing purposes. The ISC reference point is between the IMS Core and IPTV AS and used as a PO for testing purposes. The y2 reference point is between the IMS Core and the PVRS and CoDS and used as a PO for testing purposes. The Gq' reference point is between the IMS Core and T&A and is used as a PO for testing purposes.

4.3.1.1.2 Node Configuration

The Core IMS should be configured to support the pre-requisites outlined in clause 4.2.

The UPSF should be configured with the following user identities

Private Identity	Public Identity (SIP URI)	Public Identity 2 (Tel URI)	Default Public Identity	Filter criteria
userIPTV_priv	userIPTV	na	1	contact IPTV AS

iTeh STANDARD PREVIEW
(standards.iteh.ai)
Full standard:
https://standards.iteh.ai/catalog/standards/sist/8ab1dd99-a198-431c-99de-abd5fc1e0990/etsi-ts-186-020-v2.1.1-2009-12

4.3.1.2 IPTV aware UE

4.3.1.2.1 Relevant Reference Points

The Gm interface is used as a PO for interoperability tests towards the IMS Core.

The Xa interface is used as a PO for interoperability tests towards the IPTV AS.

The Xc and Xd (Dj) interfaces are used as POs for interoperability tests towards the PVRS, CoDS and TV Head End.

4.3.1.2.2 Node Configuration

The IP aware UE should be configured to support the pre-requisites outlined in clause 4.2.

4.3.1.3 IPTV Application Server (AS)

This node contains SSF, SDF, and SCF functions as well as may contain also (a part of) the UPSF.

4.3.1.3.1 Relevant Reference Points

The Xa interface is used as a PO towards the IPTV aware UE whereas the ISC interface is used as a PO towards the IMS Core.

4.3.1.3.2 Node Configuration

The IPTV AS should be configured to support the pre-requisites outlined in clause 4.2.

The media content available in the PVRS, CoDS and TV Head End has to be described within the IPTV AS.

IPTV specific data information associated with the user has to be described within the IPTV AS [9].

4.3.1.4 Content on Demand Server (CoDS)

This node contains CoD-MCF and CoD-MDF functions.

4.3.1.4.1 Relevant Reference Points

The y2 reference point is used as a PO between the Core IMS and the CoDS. The Xd reference point is used as PO between the UE and the CoDS.

4.3.1.4.2 Node Configuration

The CoDS should be configured to support the pre-requisites outlined in clause 4.2.

The media contents as described in the EPGs have to be available on the CoDS.

4.3.1.5 Personal Video Recorder Server (PVRS)

This node contains nPVR-MCF and nPVR-MDF functions.

4.3.1.5.1 Relevant Reference Points

The y2 reference point is used as a PO between the Core IMS and the PVRS. The Xd reference point is used as PO between the UE and the PVRS.

4.3.1.5.2 Node Configuration

The PVRS should be configured to support the pre-requisites outlined in clause 4.2.

The media contents as described in the EPGs have to be available on the PVRS.

4.3.1.6 Transport and Access (T&A)

This node contains transport control and processing functions, A-RACS, SPDF, NASS and RCEF. The latter is located in the IP-Edge Node.

4.3.1.7 Relevant Reference Points

The Xd, Xc and Dj reference points are used as POs between the UE and the transport node.

Gq' reference point is used as Pos between SPDF and CORE IMS.

4.3.1.8 Node Configuration

The T&A should be configured to support the pre-requisites outlined in clause 4.2.

Regarding multicast support, the function has to implement IGMPv3, IGMPv2 with SSM (source specific mapping) and in case the multicast sources are not directly connected a CORE network a multicast protocol (e.g.: PIM).

4.3.2 External Nodes

This clause lists nodes which are required for performing some of the interoperability tests but not consider to be part of the SUT, i.e. supporting equipment required for the execution of tests.

4.3.2.1 TV Head End

This node contains BC-MDF and BC-MCF functions.

4.3.2.2 Relevant Reference Points

The Xd reference point is used as PO between the UE and the TV Head End.

y2 reference point is used between CORE IMS and BC-MCF. It is not a PO so far.

iTeh STANDARD PREVIEW
(standards.iteh.ai)
Full standard:
https://standards.iteh.ai/catalog/standards/sist/8abdd99-a198-4d1c-99dc-abd95c1e0f90/etsi-ts-186-020-v2.1.1-2009-12

4.3.2.2.1 Node Configuration

The TV Head End should be configured to support the pre-requisites outlined in clause 4.2.

TV End Head should provide at least one BC channel unconditionally.

4.3.3 Summary of interfaces and protocols

Figure 1 includes also IPTV reference points to be monitored in interoperability testing.

Figure 2 identifies again the relevant reference points and provides more information about the protocols they use.

FE/ Ref.point (protocol)	UE	IMS core	UPSF	SDF	SSF	SCF	MCF	MDF	ECF/ EFF
UE	---	Gm (SIP/SDP)	---	via Core IMS (SIP/SDP)	Xa (HTTP, DVBSTP, FLUTE)	Ut (HTTP), via Core IMS (SIP/SDP)	Xc (RTSP) (Note 1)	Xd (UDP/RT) (Note 1)	Dj, Di IGMP/ MLD
IMS core	Gm (SIP/SDP)	---	Cx (Diameter)	---	---	ISC (SIP/SDP)	y2 (SIP/SDP)	---	---
UPSF	---	Cx (Diameter)	---	Sh (Diameter)	---	Sh (Diameter)	---	---	---
SDF	via Core IMS (SIP/SDP)	---	Sh (Diameter)	---	---	---	---	---	---
SSF	Xa (HTTP, DVBSTP, FLUTE)	---	---	---	---	---	---	---	---
SCF	Ut (HTTP), via Core IMS (SIP/SDP)	ISC (SIP/SDP)	Sh (Diameter)	---	---	---	via Core IMS & y2 (SIP/SDP)	---	---
MCF	Xc (RTSP) (Note 1)	y2 (SIP/SDP)	---	---	---	via Core IMS & y2 (SIP/SDP)	---	Xp (not defined)	---
MDF	Xd (UDP/RTP) (Note 1)	---	---	---	---	---	Xp (not defined)	---	---
ECF/ EFF	---	---	---	---	---	---	---	---	---

iTeh STANDARD PREVIEW (standards.iteh.ai) Full standard: https://standards.iteh.ai/catalog/standards/sist/8ab1dd99-a198-491c-99dc-abd95c1e8f90/etsi-ts-186-020-v2.1.1-2009-12

Figure 2: Summary of relevant reference points and protocols

In addition, Gq' between IMS Core and TA carries diameter protocol.

4.3.4 Method 1 and Method 2

In the interoperability test descriptions defined in the present document, two methods regarding the procedures using RTSP for IMS-based IPTV are used. More information on these methods is available in clause 7 and Annex Q of [2].

4.4 Test Descriptions

This clause defines IMS-based IPTV interoperability test descriptions (TD) for systems composed of equipment by different vendors. Each TD includes a test sequence describing user interactions with IPTV equipment as well as messages exchanged between IPTV equipment at selected standardized reference points.

TD identifiers are constructed from a test suite identifier, a test group identifier and a test number. Table 1 summarizes the main identifiers used in the present document.