INTERNATIONAL STANDARD

ISO 17565

First edition
2003-12-15

Fine ceramics (advanced ceramics, advanced technical ceramics) — Test method for flexural strength of monolithic ceramics at elevated temperature

Céramiques techniques — Méthode d'essai de résistance à la flexion des céramiques monolithiques à température élevée

iTeh STANDARD PREVIEW
(standards.iteh.ai)
ISO 17565:2003
https://standards.iteh.ai/catalog/standards/sist/07392803-47da-44bd-ab65-370e7d89dd5a/iso-17565-2003

Reference number
ISO 17565:2003(E)

© ISO 2003

PDF disclaimer

This PDF file may contain embedded typefaces. In accordance with Adobe's licensing policy, this file may be printed or viewed but shall not be edited unless the typefaces which are embedded are licensed to and installed on the computer performing the editing. In downloading this file, parties accept therein the responsibility of not infringing Adobe's licensing policy. The ISO Central Secretariat accepts no liability in this area.

Adobe is a trademark of Adobe Systems Incorporated.

Details of the software products used to create this PDF file can be found in the General Info relative to the file; the PDF-creation parameters were optimized for printing. Every care has been taken to ensure that the file is suitable for use by ISO member bodies. In the unlikely event that a problem relating to it is found, please inform the Central Secretariat at the address given below.

iTeh STANDARD PREVIEW
(standards.iteh.ai)
ISO 17565:2003
https://standards.iteh.ai/catalog/standards/sist/07392803-47da-44bd-ab65-370e7d89dd5a/iso-17565-2003

© ISO 2003

All rights reserved. Unless otherwise specified, no part of this publication may be reproduced or utilized in any form or by any means, electronic or mechanical, including photocopying and microfilm, without permission in writing from either ISO at the address below or ISO's member body in the country of the requester.

ISO copyright office
Case postale 56 • CH-1211 Geneva 20
Tel. + 41 22 749 01 11
Fax + 41 22 749 09 47
E-mail copyright@iso.org
Web www.iso.org

Published in Switzerland

© ISO 2003 – All rights reserved

Contents

Page

1 Scope 1

2 Normative references 1

3 Terms and definitions 1

4 Principle 3

5 Apparatus 3

5.1 Testing machine 3

5.2 Heating device 3

5.3 Temperature measuring and indicating instruments 4

5.4 Testing fixture 5

5.5 Micrometer 9

6 Test pieces 9

6.1 Test piece size 9

6.2 Test piece preparation 10

7 Procedure 10

8 Calculation 13

8.1 Standard formula for the flexural strength in four-point flexure 13

8.2 Standard formula for the flexural strength in three-point flexure 14

8.3 Corrections for chamfer size 14

8.4 Corrections for thermal expansion 14

8.5 Mean strength and standard deviation 15

9 Accuracy and precision 15

10 Test report 15

11 Strength scaling factors 16

Annex A (informative) General information 17

Annex B (normative) Chamfer correction factors 18

Annex C (normative) Corrections for thermal expansion 21

Annex D (informative) Weibull scaling factors 23

Annex E (informative) VAMAS round robin 25

Bibliography 26

iTeh STANDARD PREVIEW
(standards.iteh.ai)
ISO 17565:2003
https://standards.iteh.ai/catalog/standards/sist/07392803-47da-44bd-ab65-370e7d89dd5a/iso-17565-2003

© ISO 2003 – All rights reserved

Foreword

ISO (the International Organization for Standardization) is a worldwide federation of national standards bodies (ISO member bodies). The work of preparing International Standards is normally carried out through ISO technical committees. Each member body interested in a subject for which a technical committee has been established has the right to be represented on that committee. International organizations, governmental and non-governmental, in liaison with ISO, also take part in the work. ISO collaborates closely with the International Electrotechnical Commission (IEC) on all matters of electrotechnical standardization.

International Standards are drafted in accordance with the rules given in the ISO/IEC Directives, Part 2.

The main task of technical committees is to prepare International Standards. Draft International Standards adopted by the technical committees are circulated to the member bodies for voting. Publication as an International Standard requires approval by at least 75 % of the member bodies casting a vote.

Attention is drawn to the possibility that some of the elements of this document may be the subject of patent rights. ISO shall not be held responsible for identifying any or all such patent rights.

ISO 17565 was prepared by Technical Committee ISO/TC 206, *Fine ceramics*.

iTeh STANDARD PREVIEW
(standards.iteh.ai)
ISO 17565:2003
https://standards.iteh.ai/catalog/standards/sist/07392803-47da-44bd-ab65-370e7d89dd5a/iso-17565-2003

© ISO 2003 – All rights reserved

Fine ceramics (advanced ceramics, advanced technical ceramics) — Test method for flexural strength of monolithic ceramics at elevated temperature

1 Scope

This International Standard describes the method of test for determining the flexural strength of monolithic fine ceramics and whisker- or particulate-reinforced ceramic composites at elevated temperature. Flexural strength is one measure of the uniaxial strength of fine ceramics. This test method may be used for materials development, quality control, characterization and design data generation purposes.

2 Normative references

The following referenced documents are indispensable for the application of this document. For dated references, only the edition cited applies. For undated references, the latest edition of the referenced document (including any amendments) applies.

iTeh STANDARD PREVIEW
(standards.iteh.ai)

ISO 3611:1978, *Micrometer callipers for external measurement*

ISO 7500-1:—[1)], *Metallic materials — Verification of static uniaxial testing machines — Part 1: Tension/compression testing machines — Verification and calibration of the force-measuring system*

ISO 17565:2003
https://standards.iteh.ai/catalog/standards/sist/0f2d7f3f-47dd-4f0d-bf65-370e7d89dd5a/iso-17565-2003

ISO 14704:2000, *Fine ceramics (advanced ceramics, advanced technical ceramics) — Test method for flexural strength of monolithic ceramics at room temperature*

IEC 60584-1:1995, *Thermocouples — Part 1: Reference tables*

3 Terms and definitions

For the purposes of this document, the following terms and definitions apply.

3.1

flexural strength

maximum nominal stress at fracture of a specified elastic beam loaded in bending

3.2

four-point flexure

configuration of flexural strength testing where a test piece is equally loaded by two bearings symmetrically located between two support bearings

See Figure 1.

NOTE The bearings may be cylindrical rollers or cylindrical bearings.

1) To be published. (Revision of ISO 7500-1:1999)

© ISO 2003 – All rights reserved

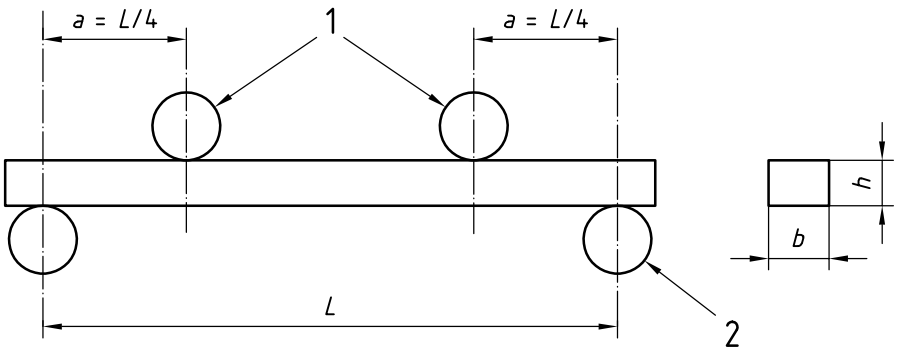

a) Four-point-1/4 point flexure

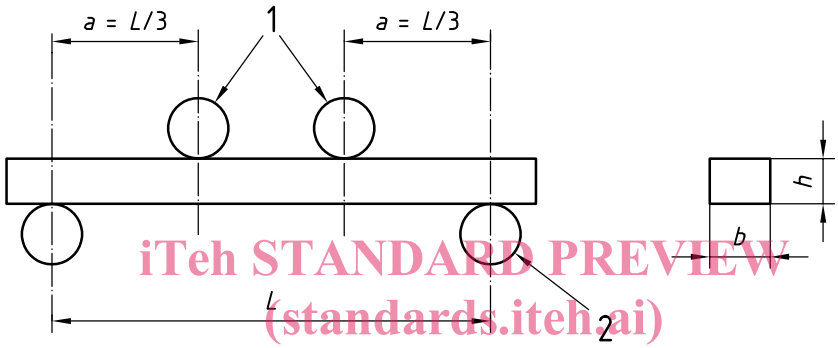

iTeh STANDARD PREVIEW
(standards.iteh.ai)

b) Four-point-1/3 point flexure

ISO 17565:2003
https://standards.iteh.ai/catalog/standards/sist/07392803-47da-44bd-ab65-370e7d89dd5a/iso-17565-2003

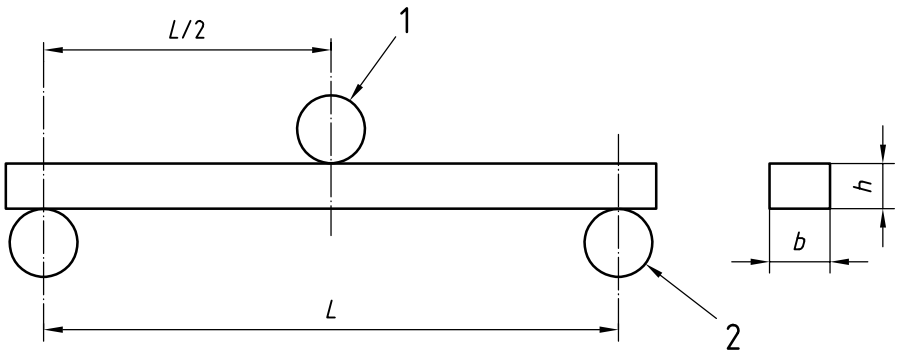

c) Three-point flexure

Key

1 loading bearings
2 support bearing

Figure 1 — Flexural test configurations

3.3

four-point-1/4 point flexure

specific configuration of four-point flexural strength testing where the inner bearings are situated one quarter of the support span away from the two outer bearings

See Figure 1 a).

© ISO 2003 – All rights reserved

3.4
four-point-1/3 point flexure
specific configuration of four-point flexural strength testing where the inner bearings are situated one third of the support span away from the two outer bearings

See Figure 1 b).

3.5
three-point flexure
configuration of flexural strength testing where a test piece is loaded at a location midway between two outer bearings

See Figure 1 c).

NOTE Four-point flexure is usually preferred since a larger amount of material is exposed to the maximum stress. See Bibliography for more information.

4 Principle

A beam test piece with a rectangular cross section is loaded in flexure until fracture. The load at fracture, the test fixture and test piece dimensions are used to compute the flexural strength, which is a measure of the uniaxial tensile strength of a ceramic. The material is assumed to be isotropic and linearly-elastic. Testing is performed at elevated temperature in air or inert atmosphere. Load is monitored versus displacement or time in order to confirm that the beam test piece fractured under elastic conditions. This International Standard is an elevated-temperature adaptation of ISO 14704. See Annex A for additional information on this test method.

iTeh STANDARD PREVIEW
(standards.iteh.ai)

5 Apparatus

ISO 17565:2003
https://standards.iteh.ai/catalog/standards/sist/07392803-47da-44bd-ab65-370e7d89dd5a/iso-17565-2003

5.1 Testing machine

A suitable testing machine capable of applying a uniform crosshead speed shall be used. The testing machine shall be in accordance with ISO 7500-1:— Class 1 with an accuracy of 1 % of indicated load at fracture.

5.2 Heating device

5.2.1 General

The furnace shall be capable of heating the test fixture and test piece as well as maintaining a uniform and constant temperature during the strength test. The furnace may have an air, inert gas or vacuum environment, as required. If an inert gas or vacuum chamber is used, and it is necessary to transmit the load through a seal, bellows or a fitting, it shall be verified that load losses or errors are less than 1 % of the expected fracture loads. The furnace may be designed so that test pieces are loaded into either hot or cold furnaces.

5.2.2 Test piece temperature stability

The furnace shall be controlled by a device for maintaining a constant temperature within $\pm 2\,^{\circ}C$ or better within the working space of the furnace, during the time that the test piece is loaded to fracture.

5.2.3 Test piece temperature uniformity

The furnace shall be capable of maintaining the test piece temperature uniform. It shall previously be determined that the temperature of the test piece shall not vary more than $10\,^{\circ}C$ over its length after a 15 min hold time at the required test temperature.

© ISO 2003 – All rights reserved

5.2.4 Furnace heating rate

The furnace control device shall also be capable of controlling the heating rates of the furnace and preventing temperature overshoots.

5.2.5 Furnace stability

The time for the system to reach thermal equilibrium at test temperature shall be determined for the test temperature to be used.

5.3 Temperature measuring and indicating instruments

5.3.1 General

Thermocouple temperature measuring equipment shall have a resolution of at least 1 °C and an accuracy of 5 °C or better. Optical pyrometers, if used, shall have a resolution of at least 5 °C and an accuracy of 5 °C or better.

NOTE 1 Resolution should not be confused with accuracy. Beware of instruments that have a resolution (read out) of 1 °C, but have an accuracy of only 10 °C; e.g., an instrument with a 1 % accuracy would only be accurate to ± 12 °C at 1 200 °C.

NOTE 2 Thermocouple temperature measuring instruments typically approximate the temperature-electromotive force (EMF) tables, but with a few degrees error.

iTeh STANDARD PREVIEW
(standards.iteh.ai)

5.3.2 Thermocouples

Thermocouples in accordance with IEC 60584-1 shall be used. The thermocouples shall exhibit low thermal inertia (the diameter of the wires shall not be greater than 0,5 mm). The thermocouples shall have a sufficient length within the furnace (with respect to heat conduction along the wires). The measuring thermocouple tip shall be as close as possible to or contacting the test piece.

ISO 17565:2003
https://standards.iteh.ai/catalog/standards/sist/1b2e2e0b-97dd-48cd-ab85-5706f7ab7dd5/iso-17565-2003

NOTE 1 In some furnaces, a control thermocouple may be installed at a location within the furnace which is convenient for furnace control and a second measuring thermocouple may be in close proximity to the test piece.

NOTE 2 The thermocouple should not contact the test piece if there is a chance the test piece will be misaligned.

NOTE 3 The thermocouple should not contact the test piece if it will chemically react with the test piece.

5.3.3 Verification of the thermocouple temperature measuring system

Thermocouples shall be checked periodically since calibration may drift with usage or contamination.

5.3.4 Radiation pyrometers

Radiation pyrometers (thermometers) may be used in instances wherein suitable thermocouples are not available, particularly at temperatures above 1 600 °C. Pyrometers may either be of the disappearing filament type or an automatic type. Pyrometers may either be spectral (operate over a narrow wavelength band), dual wavelength (operate over two narrow wavelength bands) or total (integrate or average over all wavelengths). Radiation pyrometry requires special care in order to obtain accurate and precise results. Ensure that blackbody conditions are obtained, or correct the temperature for the actual emissivity of the test piece in its environment. The pyrometer should view the test piece at right angles to one of the four long surfaces. The target size (or viewed area) of the pyrometer shall be less than 3 mm in diameter. Corrections for radiation absorption or reflectance may be necessary if the furnace has a window. The window shall be sufficiently large such that the radiation emanating from the window completely fills the objective lens of the radiation thermometer, but the window should not be so large as to cause appreciable heat loss or thermal gradients in the furnace.

NOTE See ASTM Standard Test Methods E 452, E 639, E 1256, and BS 1041, part 5 for additional information.

© ISO 2003 – All rights reserved

5.4 Testing fixture

5.4.1 General

Three- or four-point flexure configurations shall be used as illustrated in Figures 1 and 2. The four-point-1/4-point configuration is recommended. The fixtures shall either be semi-articulating or fully-articulating as specified in ISO 14704 depending upon the condition of the test pieces. If the test pieces meet the parallelism requirements of 6.1.1 and Figure 3, either a semi-articulating fixture or fully articulating fixture may be used. If the test pieces do not meet the parallelism requirements of 6.1.1 and Figure 3, a fully-articulating fixture shall be used.

NOTE 1 Machined test pieces normally have flat and parallel surfaces and semi-articulating fixtures are completely satisfactory. On the other hand, as-fired, heated treated or oxidized test pieces often do not meet the parallelism requirements. Twisting of the test piece can cause severe errors in the strength calculation, unless a fully-articulating fixture is used. The purpose of articulation is to ensure that the bearings have uniform and even contact with the test piece surface.

NOTE 2 A fully-articulating fixture has bearings or rollers that are free to roll to eliminate friction. The bearings articulate independently to match the test piece surface.

NOTE 3 A semi-articulating fixture has bearings or rollers that are free to roll to eliminate friction. The bearings articulate in pairs to match the test piece surface.

It is recognized that practical limitations may restrict the design of the test fixture, and oxidation effects may restrict its function. In such cases, alternatives may be employed, but deviations from the function specified above shall be reported in the report.

iTeh STANDARD PREVIEW
(standards.iteh.ai)

5.4.2 Bearings

ISO 17565:2003
https://standards.iteh.ai/catalog/standards/sist/07392803-47da-44bd-ab65-

Test pieces shall be loaded and supported by bearings. The bearings shall be cylindrical rollers. The bearing length shall be greater than or equal to 12 mm. The bearing diameter shall be approximately 1,5 times the test piece thickness, h. Diameters between 4,5 mm and 5,0 mm are recommended. The bearings shall have a smooth surface and shall have a diameter uniform to $\pm$ 0,015 mm. All bearings shall be free to roll in order to eliminate friction, with the exception of the middle bearing in three point flexure (see Figure 2). For four-point flexure, the two inner bearings shall be free to roll *inwards*, and the two outer bearings shall be free to roll *outwards*. In three-point flexure, the two outer bearings shall be free to roll outwards, and the inner (middle) bearing should not roll.

NOTE 1 Friction can cause errors in the stress calculations. The rolling action in elevated temperature fixtures is usually accomplished by using cylindrical bearings which rest on a flat surface. The bearings are free to roll on the surface as shown in Figure 2.

NOTE 2 The bearing diameter is specified on the basis of competing requirements. The bearings should not be so large as to cause excessive change in the moment arm ("a" in Figure 1) as a test piece deflects which can create errors from contact-point tangency shift. On the other hand, the bearings should not be so small as to create excessive wedging or contact stresses in the test piece.

5.4.3 Four-point fixture — Semi-articulating

All four bearings shall be free to roll. The two inner bearings shall be parallel to each other to within 0,015 mm over their length ($\geqslant$ 12 mm in accordance with 5.4.2). The two outer bearings shall be parallel to each other to within 0,015 mm over their length. The inner bearings shall be supported independently of the outer bearings. All four bearings shall rest uniformly and evenly across the test piece surface. The fixture shall be designed to apply equal loads to all four bearings.

NOTE The parallelism requirement may be met by control of the test fixture dimensions.

© ISO 2003 – All rights reserved

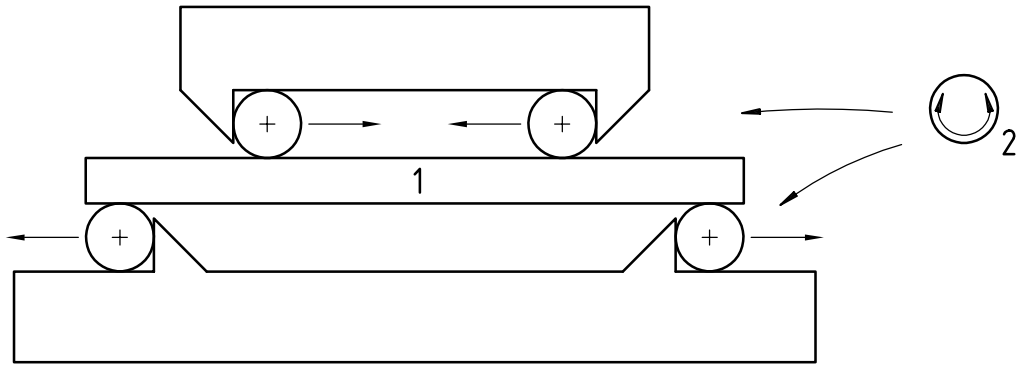

The four bearings shall be free to roll in four-point flexure

a) Four-point flexure

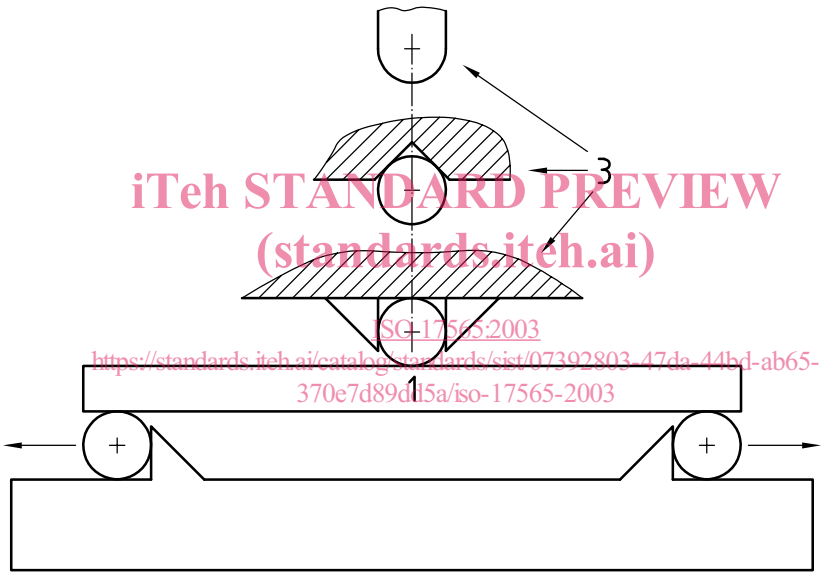

iTeh STANDARD PREVIEW
(standards.iteh.ai)
ISO 17565:2003
https://standards.iteh.ai/catalog/standards/sist/07392803-47da-44bd-ab65-370e7d89dd5a/iso-17565-2003

The two outer bearings are free to roll outwards in the three-point flexure, but the middle bearing shall be non-rolling

b) Three-point flexure

Key

1 test piece
2 alternative rolling bearings
3 alternatives

Figure 2 — Schematic of semi-articulating fixtures

© ISO 2003 – All rights reserved

Dimensions in millimetres

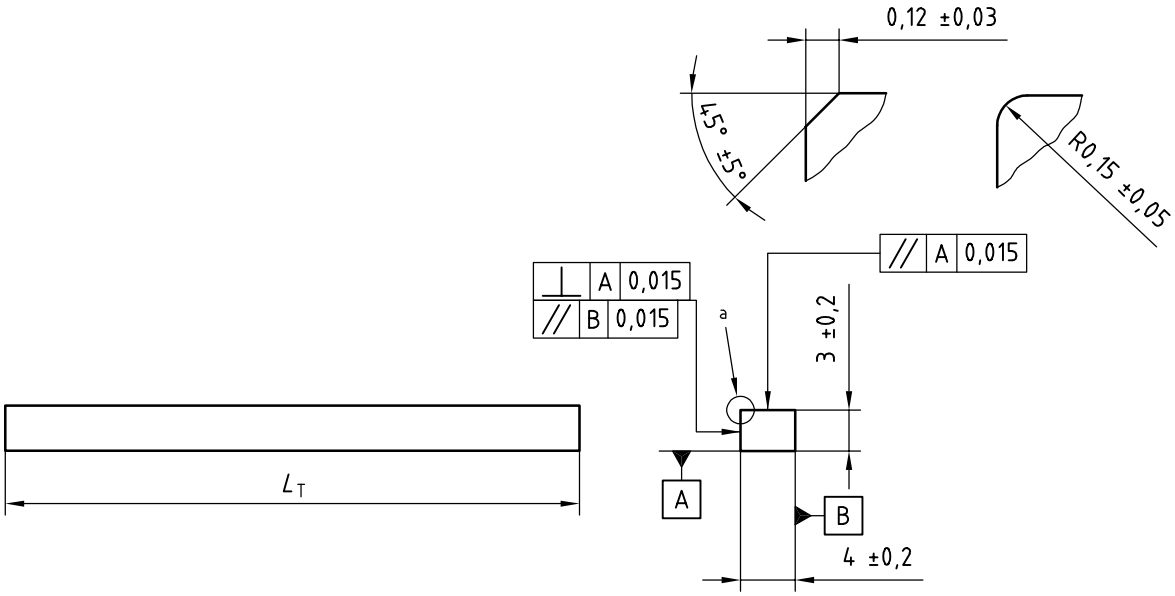

a) The standard test piece

iTeh STANDARD PREVIEW
(standards.iteh.ai)
ISO 17565:2003
https://standards.iteh.ai/catalog/standards/sist/07392803-47da-44bd-ab65-370e7d89dc5a/iso-17565-2003

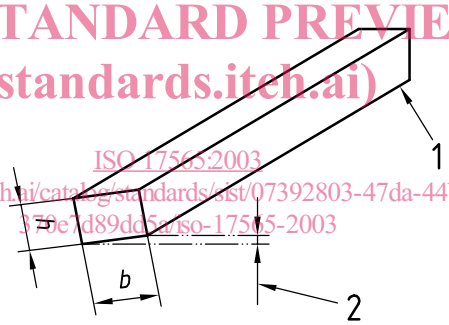

b) As-fired or heat treated test piece (see 6.1.2) — Specimen twist

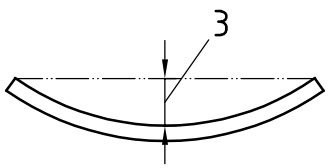

c) As-fired or heat treated test piece (see 6.1.2) — Specimen bow

Key

1 one end on flat surface
2 gap
3 bow

[a] edge chamfers or rounding

Figure 3 — Test pieces

© ISO 2003 – All rights reserved

5.4.4 Four-point fixture — Fully-articulating

All four bearings shall be free to roll. Three bearings shall articulate independently to match the test piece's surface. The fourth bearing need not articulate. All four bearings shall rest uniformly and evenly across the test piece surfaces. The fixture shall apply equal load to all four bearings.

5.4.5 Three-point fixture — Semi-articulating

The two support (outer) bearings shall be free to roll outwards. The middle bearing should be centrally located and does not need to roll. The two outer bearings shall be parallel to each other to within 0,015 mm over their length ($\geqslant$ 12 mm in accordance with 5.4.2). The two outer bearings shall articulate together to match the test piece surface *or* the middle bearing shall articulate to match the test piece surface. All three bearings shall rest uniformly and evenly across the test piece surface. The fixture shall be designed to apply equal load to the two outer bearings.

NOTE The parallelism requirement may be met by control of the test fixture dimensions.

5.4.6 Three-point fixture — Fully-articulating

The two support (outer) bearings shall be free to roll outwards. The middle bearing should not roll. Any two of the bearings shall be capable of articulating independently to match the test piece surface. All three bearings shall rest uniformly and evenly across the test piece surface. The fixture shall be designed to apply equal loads to the two outer bearings.

iTeh STANDARD PREVIEW
(standards.iteh.ai)

5.4.7 Positioning of bearings

The bearings shall be positioned so that the spans have the prescribed dimensions to within $\pm$ 0,10 mm. The middle bearing for the three-point fixture shall be positioned midway between the outer bearings to within $\pm$ 1,00 mm. The inner bearings for the four-point fixture shall be centred between the outer bearings to within $\pm$ 0,10 mm.

ISO 17565:2003
https://standards.iteh.ai/catalog/standards/sist/07392803-47da-44bd-ab65-370e7d89dd5a/iso-17565-2003

NOTE 1 The positions of the bearings may be defined either by the use of captive bearings, or by appropriate stops against which the bearings are held at the commencement of a test. The spans may be measured to the nearest 0,1 mm using a travelling microscope or other suitable device. The spans may also be verified by measurement of the distances between bearing stops and adding (outer span) or subtracting (inner span) the radii of the bearing cylinders.

NOTE 2 Some fixtures have bearings that fit into square slots with a slight clearance. Of course, the clearance should be such that the possible spans are within the prescribed limits of this International Standard. Unfortunately, it is usually not possible to verify whether a bearing sits against an inner or outer shoulder, and thus it is possible that some bearings are free to roll and others are not. This can lead to the addition of unpredictable, random friction errors. Fixtures with such slots should be used with caution.

5.4.8 Fixture material

The fixture material shall be as inert as possible for the testing conditions used. The fixture shall be oxidation resistant if the testing is done in air. The fixture shall have negligible chemical reaction with and shall not contaminate the test piece. The fixture shall remain elastic over the load and temperature ranges used. The bearings may be made of a ceramic with an elastic modulus between 200 GPa and 500 GPa and a flexural strength greater than 275 GPa at elevated temperature.

NOTE 1 Bearings should be cleaned regularly. Silicon carbide papers are helpful in cleaning scale, oxidation products or chemical reaction products off the fixtures.

NOTE 2 Various grades of silicon carbide or sapphire are suitable. Hot-pressed or sintered silicon carbides with low additive content are elastic up to temperatures in excess of 1 500 °C. Siliconized silicon carbides and high purity aluminas are less expensive, but may exhibit creep deformation at temperatures over 1 200 °C. Recrystallized silicon carbides are elastic up to temperatures of 2 000 °C, but are relatively weak due to porosity. Graphites are extremely refractory but are restricted to inert atmospheres and are soft and have a low elastic modulus. Graphites may be suitable for loading rams or portions of fixtures, but they should not be used where there are concentrated loads such as at the loading bearings.

© ISO 2003 – All rights reserved