SLOVENSKI STANDARD
SIST EN 1093-8:2000+A1:2008

01-december-2008

Varnost strojev - Vrednotenje emisije nevarnih snovi, ki jih prenaša zrak - 8. del: Parameter koncentracije onesnaževalnih snovi, metoda preskusa na preskusnem mestu

Safety of machinery - Evaluation of the emission of airborne hazardous substances - Part 8: Pollutant concentration parameter, test bench method

Sicherheit von Maschinen - Bewertung der Emission von luftgetragenen Gefahrstoffen - Teil 8: Konzentrationsparameter des luftverunreinigenden Stoffes, Prüfstandverfahren

Sécurité des machines - Evaluation de l'émission de substances dangereuses véhiculées par l'air - Partie 8: Paramètre de concentration en polluant, méthode sur banc d'essai

Ta slovenski standard je istoveten z: EN 1093-8:1998+A1:2008

ICS:

13.040.40	Emisije nepremiļ nih virov	Stationary source emissions
13.110	Varnost strojev	Safety of machinery

SIST EN 1093-8:2000+A1:2008 en,fr,de

EUROPEAN STANDARD

NORME EUROPÉENNE

EUROPÄISCHE NORM

EN 1093-8:1998+A1

July 2008

ICS 13.040.40

Supersedes EN 1093-8:1998

English Version

Safety of machinery - Evaluation of the emission of airborne hazardous substances - Part 8: Pollutant concentration parameter, test bench method

Sécurité des machines - Evaluation de l'émission de substances dangereuses véhiculées par l'air - Partie 8: Paramètre de concentration en polluant, méthode sur banc d'essai

Sicherheit von Maschinen - Bewertung der Emission von luftgetragenen Gefahrstoffen - Teil 8: Konzentrationsparameter des luftverunreinigenden Stoffes, Prüfstandverfahren

This European Standard was approved by CEN on 4 September 1998 and includes Amendment 1 approved by CEN on 8 June 2008.

CEN members are bound to comply with the CEN/CENELEC Internal Regulations which stipulate the conditions for giving this European Standard the status of a national standard without any alteration. Up-to-date lists and bibliographical references concerning such national standards may be obtained on application to the CEN Management Centre or to any CEN member.

This European Standard exists in three official versions (English, French, German). A version in any other language made by translation under the responsibility of a CEN member into its own language and notified to the CEN Management Centre has the same status as the official versions.

CEN members are the national standards bodies of Austria, Belgium, Bulgaria, Cyprus, Czech Republic, Denmark, Estonia, Finland, France, Germany, Greece, Hungary, Iceland, Ireland, Italy, Latvia, Lithuania, Luxembourg, Malta, Netherlands, Norway, Poland, Portugal, Romania, Slovakia, Slovenia, Spain, Sweden, Switzerland and United Kingdom.

EUROPEAN COMMITTEE FOR STANDARDIZATION
COMITÉ EUROPÉEN DE NORMALISATION
EUROPÄISCHES KOMITEE FÜR NORMUNG

Management Centre: rue de Stassart, 36 B-1050 Brussels

Ref. No. EN 1093-8:1998+A1:2008: E

Contents

Page

Foreword

This document (EN 1093-8:1998+A1:2008) has been prepared by Technical Committee CEN/TC 114 "Safety of machinery", the secretariat of which is held by DIN.

This European Standard shall be given the status of a national standard, either by publication of an identical text or by endorsement, at the latest by January 2009, and conflicting national standards shall be withdrawn at the latest by December 2009.

This document includes Amendment 1, approved by CEN on 2008-06-08.

This document supersedes EN 1093-8:1998.

The start and finish of text introduced or altered by amendment is indicated in the text by tags ▌A1⟩ ⟨A1▌.

This European Standard has been prepared under a mandate given to CEN by the European Commission and the European Free Trade Association, and supports essential requirements of EU Directive(s).

▌A1⟩ For relationship with EU Directive(s), see informative Annexes ZA and ZB, which are integral parts of this document. ⟨A1▌

According to the CEN/CENELEC Internal Regulations, the national standards organizations of the following countries are bound to implement this European Standard: Austria, Belgium, Bulgaria, Cyprus, Czech Republic, Denmark, Estonia, Finland, France, Germany, Greece, Hungary, Iceland, Ireland, Italy, Latvia, Lithuania, Luxembourg, Malta, Netherlands, Norway, Poland, Portugal, Romania, Slovakia, Slovenia, Spain, Sweden, Switzerland and United Kingdom.

Introduction

This European Standard is a type B standard as stated in ENV 1070:1993.

This European Standard is a part of EN 1093. Part 1 of this standard presents a selection of different methods for the evaluation of the emission of airborne hazardous substances from machines.

1 Scope

This European Standard specifies a test bench method for the measurement of the pollutant concentration parameter of a specified airborne hazardous substance from machines using a test bench under specified operating conditions.

This method is only applicable for the determination of emitted gases, vapours and respirable particles.

The determination of the emission rate in a test bench (see EN 1093-3) shall be used when possible.

Measurement of the pollutant concentration parameter of a machine can serve for the:

a) evaluation of the performance of a machine;

b) evaluation of the improvement of the machine;

c) comparison of machines within groups of machines with the same intended use (groups are defined by the function and materials processed);

d) ranking of machines from the same group according to their pollutant concentration parameters;

e) determination of the state of the art of machines with respect to their pollutant concentration parameter.

2 Normative references

This European Standard incorporates by dated or undated reference, provisions from other publications. These normative references are cited at the appropriate places in the text and the publications are listed hereafter. For dated references, subsequent amendments to or revisions of any of these publications apply to this European Standard only when incorporated in it by amendment or revision. For undated references the latest edition of the publication referred to applies.

EN 292-1:1991, *Safety of machinery - Basic concepts, general principles for design - Part 1: Basic terminology, methodology.*

EN 292-2:1991, *Safety of machinery - Basic concepts, general principles for design - Part 2: Technical principles and specifications.*

EN 292-2/A1:1995, *Safety of machinery - Basic concepts, general principles for design - Part 2: Technical principles and specifications; Amendment A1.*

ENV 1070:1993, *Safety of machinery – Terminology.*

EN 1093-1, *Safety of machinery - Evaluation of the emission of airborne hazardous substances – Part 1: Selection of test methods.*

ISO 2602:1980, *Statistical interpretation of test results - Estimation of the mean - Confidence interval.*

3 Definitions

For the purposes of this European Standard the definitions of ENV 1070:1993 and the following definition applies:

3.1
pollutant concentration parameter, cabin, P_{cc}
the measured concentration of a specified pollutant in defined position(s) near the machine. For the purpose of this European Standard one measurement point shall be used, preferably in the duct.

4 Principle

The principle of the measurement method is to operate machines under controlled conditions in a test bench and to measure the pollutant concentration at a well defined location (see 5.2) for a specified exhaust air flow rate of the test bench. This concentration gives an indication of the emission from the machine.

5 Test bench

5.1 Description of the test bench

The test bench consists of a cabin with a funnel and a subsequent air mover (see figure 1).

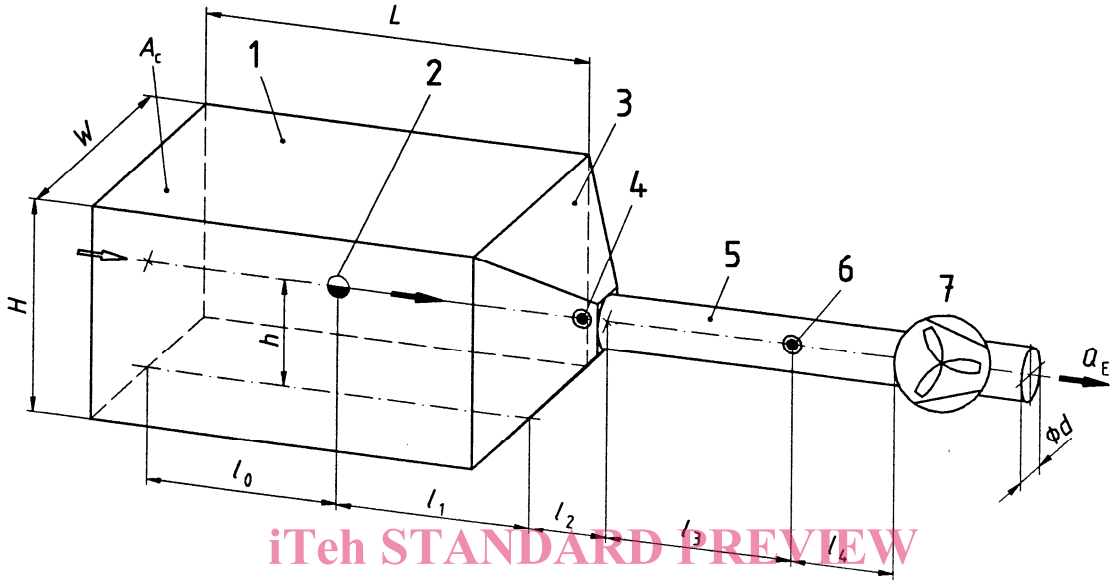

A_c cross section of the cabin;
H height of the cabin;
h height of the emission source from the cabin floor;
W width of the cabin;

1 test cabin;
2 source[1];
3 funnel;
4 measurement point 2;
5 tunnel;
6 preferred measurement point 1;
7 air mover.

W/H	≥ 0,66 ≤ 1,5	l_1	≥ 0,5√A_c ≤ 2,0√A_c ≤ 2,0m	l_3	≥ 5d
h	≤ 0,66H			l_4	≥ 3d
l_0	≥ 0,5√A_c	L_2	≥ 0,5√A_c ≤ √A_c	Q_E	cabin exhaust flow rate

Figure 1 — Test bench (schematic layout)

The air mover produces an air flow in the test cabin from the inlet towards the funnel. The cabin shall be equipped with a permeable inlet (e. g. macroporous filter material, perforated plastic foil or plate) in order to obtain a uniform air flow across the inlet and to avoid the escape of the pollutant from the cabin.

The cabin exhaust flow rate shall be specified in type C standards. It has to be controlled in order to remain constant. The cross section of the cabin (form and dimensions) shall be chosen according to the size of the machine. The maximum cross section area of the machine shall not exceed a fifth of the cross section area of the cabin.

---

1) Generally the source cannot be considered as a point, but as a zone including several sources.

The cabin shall be long enough to accommodate the machine and the operator with the emission sources as close to the specified location as practicable in figure 1.

The machines shall be positioned in the cabin in such a way that the source of the pollutant emitted from the machine is in the area of the longitudinal axis of the cabin at a distance of l_1 from the beginning of the funnel and of l_0 from the inlet.

5.2 Location of measurement points

The concentration of the pollutant shall be measured at the measurement point 1 in the exhaust duct.

If it is necessary to use measuring instruments, which have bigger sampling heads and/or are only suitable for lower air velocities, the measurement point 2, located in the area of the middle axis of the funnel as near as possible to the duct may be used.

6 Procedure

6.1 Operation of the machines

The machine shall be operated according to its intended use. The stipulation of working procedures, the tools used and the materials to be processed with specified categories of machines will be defined in type C standards.

If the machine is equipped with its own separator recirculating air towards the working zone according to the intended use, the outlet of the separator shall be located in the cabin in such a way as to ensure that the pollutant from this secondary source reaches the measurement point.

The machine shall be operated in accordance with the manufacturer's instructions. When the machine is provided with pollution control equipment this shall be adjusted according to these instructions.

Tests shall not be carried out unless manufacturer's specifications for operating the pollution control equipment are available.

6.2 Measurement procedures

The measurement procedures used for the pollutant concentration shall comply with the appropriate International and European standards. Detailed procedures shall be specified in the appropriate type C standards for each type of machine.

The measurement shall take into account the normal operational cycles of the machine.

The measurement time shall be sufficient to collect concentration data representative of the normal operational cycles of the machines.

As least three tests shall be performed.

7 Expression of results

The pollutant concentration parameter, cabin P_{cc}, is the mean value and the 95 % confidence interval according to ISO 2602 of the test results.