SLOVENSKI STANDARD
SIST EN 12516-2:2015

01-januar-2015

Nadomešča:

SIST EN 12516-2:2004

Industrijski ventili - Trdnost ohišja - 2. del: Metoda za izračun ohišij jeklenih ventilov

Industrial valves - Shell design strength - Part 2: Calculation method for steel valve shells

Industriearmaturen - Gehäusefestigkeit - Teil 2: Berechnungsverfahren für drucktragende Gehäuse von Armaturen aus Stahl

Robinetterie industrielle - Résistance mécanique des enveloppes - Partie 2 : Méthode de calcul relative aux en-veloppes d'appareils de robinetterie en acier

Ta slovenski standard je istoveten z: EN 12516-2:2014

ICS:

23.060.01 Ventili na splošno Valves in general

SIST EN 12516-2:2015 en,fr,de

EUROPEAN STANDARD

NORME EUROPÉENNE

EUROPÄISCHE NORM

EN 12516-2

October 2014

ICS 23.060.01

Supersedes EN 12516-2:2004

English Version

Industrial valves - Shell design strength - Part 2: Calculation method for steel valve shells

Robinetterie industrielle - Résistance mécanique des enveloppes - Partie 2 : Méthode de calcul relative aux enveloppes d'appareils de robinetterie en acier

Industriearmaturen - Gehäusefestigkeit - Teil 2: Berechnungsverfahren für drucktragende Gehäuse von Armaturen aus Stahl

This European Standard was approved by CEN on 9 August 2014.

CEN members are bound to comply with the CEN/CENELEC Internal Regulations which stipulate the conditions for giving this European Standard the status of a national standard without any alteration. Up-to-date lists and bibliographical references concerning such national standards may be obtained on application to the CEN-CENELEC Management Centre or to any CEN member.

This European Standard exists in three official versions (English, French, German). A version in any other language made by translation under the responsibility of a CEN member into its own language and notified to the CEN-CENELEC Management Centre has the same status as the official versions.

CEN members are the national standards bodies of Austria, Belgium, Bulgaria, Croatia, Cyprus, Czech Republic, Denmark, Estonia, Finland, Former Yugoslav Republic of Macedonia, France, Germany, Greece, Hungary, Iceland, Ireland, Italy, Latvia, Lithuania, Luxembourg, Malta, Netherlands, Norway, Poland, Portugal, Romania, Slovakia, Slovenia, Spain, Sweden, Switzerland, Turkey and United Kingdom.

EUROPEAN COMMITTEE FOR STANDARDIZATION
COMITÉ EUROPÉEN DE NORMALISATION
EUROPÄISCHES KOMITEE FÜR NORMUNG

CEN-CENELEC Management Centre: Avenue Marnix 17, B-1000 Brussels

Ref. No. EN 12516-2:2014 E

Contents

Page

Foreword

This document (EN 12516-2:2014) has been prepared by Technical Committee CEN/TC 69 “Industrial valves”, the secretariat of which is held by AFNOR.

This European Standard shall be given the status of a national standard, either by publication of an identical text or by endorsement, at the latest by April 2015, and conflicting national standards shall be withdrawn at the latest by April 2015.

Attention is drawn to the possibility that some of the elements of this document may be the subject of patent rights. CEN [and/or CENELEC] shall not be held responsible for identifying any or all such patent rights.

This document supersedes EN 12516-2:2004.

This document has been prepared under a mandate given to CEN by the European Commission and the European Free Trade Association, and supports essential requirements of EU Directive 97/23/EC (Pressure Equipment Directive).

For relationship with EU Directive 97/23/EC (Pressure Equipment Directive), see informative Annex ZA, which is an integral part of this document.

In comparison with the previous version, the following significant changes have been made:

a) the normative references were updated;

b) all formulae and figures have been renumbered; in particular 10.6 “Design temperature” became 10.5 “Calculation of the bolt diameter”;

c) some formulae were changed:

   1) Formulae (3) to (6) for calculated wall thickness have been added;

   2) Formulae (9) and (10) for calculation of e_C in case of d_o / d_i > 1,7 have been added;

   3) Formulae (17) and (20) for conical bodies or branches have been added;

d) the figures were changed and/or updated:

   1) a new Figure 1 “Composition of section thickness and tolerance allowances” has been added;

   2) Figure 2 “Cone calculation coefficient” has been over-worked;

   3) former Figures 6a and 6b are now combined in Figure 7 “Calculation coefficient B_n for rectangular cross-sections”;

   4) Figures 23, 24, and 25 used to establish the calculation coefficients C_X, C_Y and C_Z were moved to 8.2.1;

   5) the new Figure 46 “Types of flange connections” has been added;

e) tables were updated:

   1) Table 1 giving the symbols characteristics and units has been revised;

   2) a column for test conditions in Table 2 “Nominal design stresses (allowable stresses)” has been added;

3) Table 5 “Flat circular plates and annular plates — Bending moments as a function of load cases and clamping conditions” has been revised;

4) Table 7 “Lever arms of the forces in the moment formulae” has been revised;

f) Clause 6 “Nominal design stresses for pressure parts other than bolts” now contains references to PED 97/23/EC;

g) Clause 7 “Calculation methods for the wall thickness of valve bodies” has been restructured; and 7.1 now contains information on calculation of the surface-comparison;

h) Subclauses 8.2.2 and 8.2.3 now draw a distinction between “direct loading” and “not subjected to direct loading”; and 8.2.3 now contains a warning regarding the mean support diameter d_{mA};

i) there is a new Subclause 8.3.3.5 regarding the diameter of centre of gravity;

j) Clause 10 “Calculation methods for flanges” has been over-worked;

k) the former informative Annex A “Allowable stresses” has been deleted;

l) the Annex “Characteristic values of gaskets and joints” has been over-worked;

m) Annex ZA has been updated.

EN 12516, *Industrial valves — Shell design strength*, consists of four parts:

— *Part 1: Tabulation method for steel valve shells*;

— *Part 2: Calculation method for steel valve shells* (the present document);

— *Part 3: Experimental method*;

— *Part 4: Calculation method for valve shells manufactured in metallic materials other than steel*.

According to the CEN-CENELEC Internal Regulations, the national standards organizations of the following countries are bound to implement this European Standard: Austria, Belgium, Bulgaria, Croatia, Cyprus, Czech Republic, Denmark, Estonia, Finland, Former Yugoslav Republic of Macedonia, France, Germany, Greece, Hungary, Iceland, Ireland, Italy, Latvia, Lithuania, Luxembourg, Malta, Netherlands, Norway, Poland, Portugal, Romania, Slovakia, Slovenia, Spain, Sweden, Switzerland, Turkey and the United Kingdom.

Introduction

EN 12516, *Industrial valves — Shell design strength*, is composed of four parts. EN 12516-1 and EN 12516-2 specify methods for determining the thickness of steel valve shells by tabulation and calculation methods respectively. EN 12516-3 establishes an experimental method for assessing the strength of valve shells in steel, cast iron and copper alloy by applying an elevated hydrostatic pressure at ambient temperature. EN 12516-4 specifies methods for calculating the thickness for valve shells in metallic materials other than steel.

The calculation method, EN 12516-2, is similar in approach to the former DIN 3840 where the designer is required to calculate the wall thickness for each point on the pressure temperature curve using the allowable stress at that temperature for the material he has chosen (see Bibliography, reference [1]). The allowable stress is calculated from the material properties using safety factors that are defined in EN 12516-2. The formulae in EN 12516-2 consider the valve as a pressure vessel and ensure that there will be no excessive deformation or plastic instability.

The tabulation method, EN 12516-1, is similar in approach to ASME B16.34 (see Bibliography, reference [2]) in that the designer can look up the required minimum wall thickness dimension of the valve body from a table. The internal diameter of the inlet bore of the valve gives the reference dimension from which the tabulated wall thickness of the body is calculated.

The tabulated thicknesses in EN 12516-1 are calculated using the thin cylinder formula that is also used in EN 12516-2. The allowable stress used in the formula is equal to 120,7 MPa and the operating pressure, p_c, in MPa, varies for each PN and Class designation. EN 12516-1 gives these p_c values for all the tabulated PN and Class designations.

EN 12516-1 specifies PN, Standard Class and Special Class pressure temperature ratings for valve shells with bodies having the tabulated thickness. These tabulated pressure temperature ratings are applicable to a group of materials and are calculated using a selected stress, which is determined from the material properties representative of the group, using safety factors defined in EN 12516-1.

Each tabulated pressure temperature rating is given a reference pressure designation to identify it.

The tabulation method gives one thickness for the body for each PN (see EN 12516-1:2014, 3.1 PN (Body)) or Class designation depending only on the inside diameter, D_i, of the body at the point where the thickness is to be determined.

The calculated pressure is limited by the ceiling pressure which sets up an upper boundary for high strength materials and limits the deflection.

A merit of the tabulation method, which has a fixed set of shell dimensions irrespective of the material of the shell, is that it is possible to have common patterns and forging dies. The allowable pressure temperature rating for each material group varies proportionally to the selected stresses of the material group to which the material belongs, using the simple rules above.

A merit of the calculation method is that it allows the most efficient design for a specific application using the allowable stresses for the actual material selected for the application.

The two methods are based on different assumptions, and as a consequence the detail of the analysis is different (see Bibliography, reference [3]). Both methods offer a safe and proven method of designing pressure-bearing components for valve shells.

1 Scope

This European Standard specifies the method for the strength calculation of the shell with respect to internal pressure of the valve.

2 Normative references

The following documents, in whole or in part, are normatively referenced in this document and are indispensable for its application. For dated references, only the edition cited applies. For undated references, the latest edition of the referenced document (including any amendments) applies.

EN 19:2002, *Industrial valves — Marking of metallic valves*

EN 1092-1:2007+A1:2013, *Flanges and their joints — Circular flanges for pipes, valves, fittings and accessories, PN designated — Part 1: Steel flanges*

EN 1591-1:2013, *Flanges and their joints — Design rules for gasketed circular flange connections — Part 1: Calculation*

EN 10269:2013, *Steels and nickel alloys for fasteners with specified elevated and/or low temperature properties*

EN 12266-1:2012, *Industrial valves — Testing of metallic valves — Part 1: Pressure tests, test procedures and acceptance criteria - Mandatory requirements*

EN 12266-2:2012, *Industrial valves — Testing of metallic valves — Part 2: Tests, test procedures and acceptance criteria - Supplementary requirements*

EN 13445-3:2014, *Unfired pressure vessels — Part 3: Design*

EN ISO 3506-1:2009, *Mechanical properties of corrosion-resistant stainless steel fasteners — Part 1: Bolts, screws and studs (ISO 3506-1)*

3 Symbols and units

The following symbols are used:

Table 1 — Symbols characteristics and units

Symbol	Unit	Characteristic
a_H	mm	lever arm for horizontal force
a_S	mm	lever arm for bolt force
a_V	mm	lever arm for vertical force
B	—	calculation coefficient to determine the thickness of the flange
$B_{01...03}$	—	calculation coefficient for oval and rectangular cross-sections
$B_{1...3}$	—	calculation coefficient for oval and rectangular cross-sections
B_5	—	correction factor for oval flanges
B_{FI}, B_{FII}	—	calculation coefficient for flat circular plates
B_h	—	calculation coefficient to determine the thickness of the flange
B_{MI}, B_{MII}	—	calculation coefficient for flat circular plates
B_{PI}, B_{PII}	—	calculation coefficient for flat circular plates

b	mm	double flange width
b_1	mm	minor width in oval and rectangular cross section
b_2	mm	major width in oval and rectangular cross section
b_{D1}, b_{D2}	mm	width of the seal
b'_1	mm	width in oval and rectangular cross section
b_D	mm	width of the seal
b_s	mm	effective width for reinforcement
C_x, C_y, C_z	—	calculation coefficient for covers made of flat plates
C	—	calculation coefficient for lens-shaped gaskets
c	mm	design allowance for bolts
c_1	mm	fabrication tolerance
c_2	mm	standardized corrosion and erosion allowance
d_o	mm	outside diameter
d_0, d'_0	mm	diameter in base body
d_{01}, d_{02}	mm	diameter for self-sealing closure
d_1	mm	diameter in branch
d_2	mm	diameter in further branch
d_4	mm	outside diameter of collar flange
d_A	mm	outside diameter of the plate/cover
d_a	mm	outside flange diameter
d_i	mm	inside diameter
d_f	mm	diameter of the biggest inscribed circle
d_k	mm	diameter in knuckle
d_K	mm	diameter in corner welds
d_L	mm	hole diameter
d'_L	mm	reduced bolt hole diameter
d_m	mm	mean diameter of the plate/cover
d_{mA}	mm	mean diameter of the face (see Figure 28)
d'_m	mm	mean diameter
d_D	mm	mean diameter of the seal
d_s	mm	required bolt diameter
d_t	mm	bold circle diameter / reference circle diameter
d_p	mm	diameter of centre of gravity
d_{ast}	mm	stuffing box outside diameter
d_{ist}	mm	stuffing box inside diameter
d_{S0}	mm	calculated bolt diameter without design allowance
d_V	mm	diameter of the vertical force at the cone
E	MPa	modulus of elasticity

E_D	MPa	modulus of elasticity for material of the seal
e_n	mm	wall thickness
e_{an}	mm	wall thickness (final / actual)
e_{acn}	mm	actual wall thickness less c1 and c2
e_{acF}	mm	thickness of flange neck
e_{cn}	mm	calculated theoretical minimum wall thickness, without c_1 and c_2
F_{DV}	N	minimum bolt force for the assembly condition
F_F	N	flange force
F_H	N	horizontal component force
F_S	N	bolt force for operating conditions
F_{SB}	N	minimum bolt force
F_{S0}	N	bolt force for assembly conditions
F_T	N	tensile force
F_V	N	vertical force at the cone
F_Z	N	additional force
f	MPa	nominal design stress
f_d	MPa	maximum value of the nominal design stress for normal operating load cases
$f_{d/t}$	MPa	nominal design stress for design conditions at temperature t °C
g_1, g_2	mm	welding throat depth
h	mm	plate thickness
h_0	mm	minimum height for the seating shoulder
h_1	mm	minimum height of the inserted ring
h_D	mm	minimum depth of the sealing ledge
h_r	mm	plate thickness
h_A	mm	height of flange hub
h_c	mm	plate thickness
h_F	mm	thickness of flange
h_N	mm	reduced plate thickness
k_c	—	welding factor
l	mm	length
$l_{0...3}$	mm	effective length for cylindrical bodies
l'	mm	length which is influenced by the entry nozzle
l'_0	mm	length for calculating body shapes in cross section II
∩*l3*	mm	length for calculating body shapes in cross section II
M	Nm	external moment
M_i	Nm	summary of moments M_P, M_F, M_M
M_a	Nm	external moment
M_{a0}	Nm	moment for assembly condition

M_{aB}	Nm	moment for operation condition
M_F	Nm	single force (point force)
M_i	Nm	moment
M_{max}	Nm	maximum bending moment
M_M	Nm	rim moment
M_P	Nm	resulting moment from internal pressure
M_r	Nm	bending moment in radial direction
M_t	Nm	bending moment in tangential direction
m	—	gasket coefficient
n	—	number of bolts
n_1	—	load carrying factor
p	MPa	pressure
p_c	MPa	calculation pressure
p_d	MPa	design pressure
p_F	MPa	contact pressure
P_s		centre of gravity
PS	MPa	maximum allowable pressure
R	mm	radius for calculating load cases
R_{eH}	MPa	upper yield strength
$R_{eH/t}$	MPa	upper yield strength at temperature t °C
R_i	mm	inner Radius of spherical cap
R_m	MPa	tensile strength
$R_{m/t}$	MPa	tensile strength at temperature t °C
$R_{m/T/t}$	MPa	creep rupture strength for T hours at temperature t °C
$R_{p0,2}$	MPa	0,2 % - proof strength
$R_{p0,2/t}$	MPa	0,2 % - proof strength at temperature t °C
$R_{p0,2/t\ Test}$	MPa	0,2 % - proof strength at test temperature t °C
$R_{p1,0/t\ Test}$	MPa	1,0 % - proof strength at test temperature t °C
$R_{p1,0}$	MPa	1,0 % - proof strength
$R_{p1,0/t}$	MPa	1,0 % - proof strength at temperature t °C
$R_{p1,0/T/t}$	MPa	1,0 % - creep proof strength for T hours at temperature t °C
r	mm	radius
r_0	mm	radius for calculating load cases
r_1	mm	radius for calculating load cases
r_o	mm	outside radius
r_i	mm	inside radius
r_D	mm	radius to the middle of the support plate for the seal
r_F	mm	radius to F_1

S_D	—	safety factor for gasket value
SF	—	safety factor
s	mm	distance of the centre of gravity of the half circular ring from the centreline
s_N	mm	thickness of weld
S_S	mm	centre of gravity
S_1, S_2	—	centre of gravity
s_1, s_2	mm	distance of the centre of gravity or distance
s_3	mm	distance
T	h	time
t	°C	temperature
t_d	°C	design temperature
U_D	mm	mean circumference
V	—	correction factor of bolt hole diameter
W, W_I, W_{II}, W_{III}	mm^3	flange resistance
W_{avI}, W_{avII}	mm^3	flange resistance in cross-section
W_{req1}	mm^3	flange resistance in operating condition
W_{req2}	mm^3	flange resistance in assembly condition
X	mm	distance variable
Y	mm	distance variable
Z		coefficient
Z_1	mm^3	coefficient
α	°	angle of lenticular gasket
α	—	form factor
β	—	calculation factor = α / δ
η	—	machining quality factor
μ	—	Poisson's ratio
δ	—	ratio of bolt forces against pressure forces
δ_1	—	proof stress ratio
φ	°	angle for corner welds
φ_k	°	angle in knuckle area
Φ	°	angle of body branch
Φ_A	°	angle for valve bodies with oblique branch
χ	—	calculation factor depending on the gasket material
σ	MPa	stress in the cross sections or branches
σ_{VU}	MPa	minimum sealing constant assembly state
σ_{VO}	MPa	maximum sealing constant assembly state
σ_{BO}	MPa	maximum sealing constant operating state

σ_{I}, σ_{II}, σ_{III}	MPa	stress in the cross section I, II, III

4 General conditions for strength calculation

Formulae (1) and (2) apply to mainly static internal pressure stressing. The extent to which these formulae can also be applied to pulsating internal pressure stressing is described in Clause 12.

The total wall thickness is found by adding the following allowances:

$$e_0 = e_{c0} + c_1 + c_2 \quad (1)$$

$$e_1 = e_{c1} + c_1 + c_2 \quad (2)$$

$$e_{a0} \geq e_0 \quad (3)$$

$$e_{a1} \geq e_1 \quad (4)$$

where

e_{c0}, e_{c1} are the calculated wall thicknesses in accordance with the rules given in this standard at different locations on the valve shell (see Figures 1a and 2);

c_1 is a manufacturer tolerance allowance;

c_2 is a standardized corrosion and erosion allowance.

The values of the corrosion allowance are:

c_2 = 1 mm for ferritic and ferritic-martensitic steels;

c_2 = 0 mm for all other steels;

c_2 = 0 mm if e_{c0} ≥ 30 mm or if e_{c1} ≥ 30 mm.

When checking the wall thickness of existing pressure retaining shells these allowances shall be subtracted from the actual wall thickness.

$$e_{ac0} = e_{a0} - c_1 - c_2 \quad (5)$$

$$e_{ac1} = e_{a1} - c_1 - c_2 \quad (6)$$

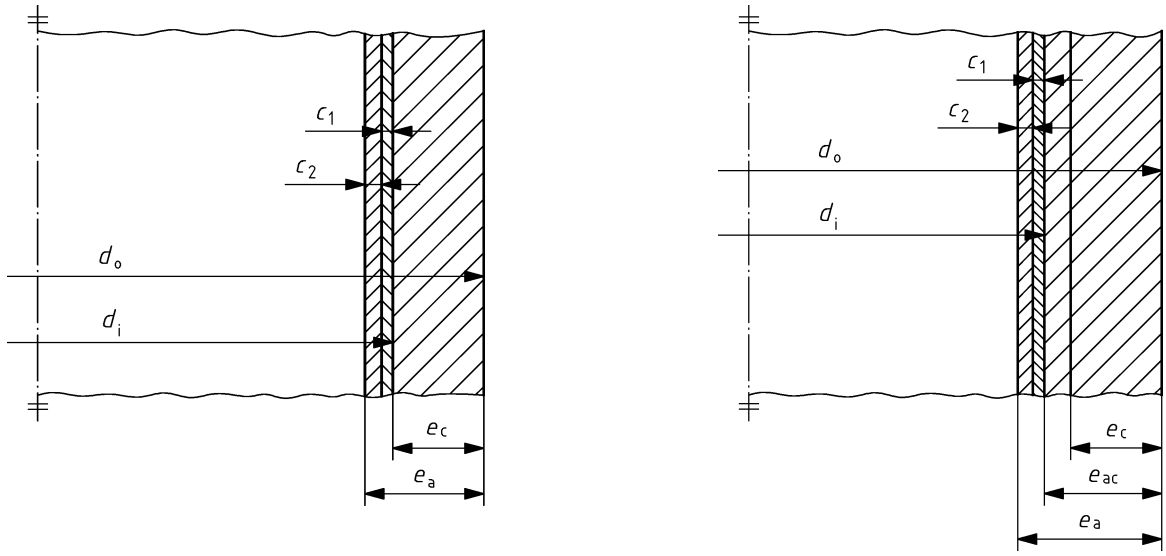

a) for new design **b) for verification of existing wall thickness**

Key

e	wall thickness
d	diameter
a	actual
c	calculated
i	inner
o	outer
c_1	fabrication tolerance
c_2	corrosion allowance
e_c	calculated wall thickness
e_{ac}	actual minimum wall thickness less c_1 and c_2
e_a	actual wall thickness

$e_{ac} \geq e_c$

$e_{ac} \geq e_c + c_1 + c_2$

Figure 1 — Composition of section thickness and tolerance allowances

5 Design pressure

All reasonably foreseeable conditions shall be taken into account, which occur during operation and standby.

Therefore the design pressure p_d shall not be less than the maximum allowable pressure PS. In formulae, p_d is shortly written as p.

6 Nominal design stresses for pressure parts other than bolts

6.1 General

The nominal design stresses (allowable stresses) for steels (see PED 97/23/EC) with a minimum rupture elongation of ≥ 14 % and a minimum impact energy measured on a Charpy-V-notch impact test specimen of ≥ 27 J shall be calculated in accordance with Table 2.

The calculation of the test conditions is optional.