INTERNATIONAL STANDARD

ISO 18756

First edition
2003-12-01

Fine ceramics (advanced ceramics, advanced technical ceramics) — Determination of fracture toughness of monolithic ceramics at room temperature by the surface crack in flexure (SCF) method

iTeh STANDARD PREVIEW
(standards.iteh.ai)

Céramiques techniques — Détermination de la ténacité à la rupture des céramiques monolithiques à température ambiante par fissuration superficielle en flexion

ISO 18756:2003
https://standards.iteh.ai/catalog/standards/sist/014c9b37-ea7a-4630-a95c-aeb7589a08e0/iso-18756-2003

Reference number
ISO 18756:2003(E)

© ISO 2003

PDF disclaimer

This PDF file may contain embedded typefaces. In accordance with Adobe's licensing policy, this file may be printed or viewed but shall not be edited unless the typefaces which are embedded are licensed to and installed on the computer performing the editing. In downloading this file, parties accept therein the responsibility of not infringing Adobe's licensing policy. The ISO Central Secretariat accepts no liability in this area.

Adobe is a trademark of Adobe Systems Incorporated.

Details of the software products used to create this PDF file can be found in the General Info relative to the file; the PDF-creation parameters were optimized for printing. Every care has been taken to ensure that the file is suitable for use by ISO member bodies. In the unlikely event that a problem relating to it is found, please inform the Central Secretariat at the address given below.

iTeh STANDARD PREVIEW
(standards.iteh.ai)

ISO 18756:2003
https://standards.iteh.ai/catalog/standards/sist/014c9b37-ea7a-4630-a95c-aeb7589a08e0/iso-18756-2003

© ISO 2003

All rights reserved. Unless otherwise specified, no part of this publication may be reproduced or utilized in any form or by any means, electronic or mechanical, including photocopying and microfilm, without permission in writing from either ISO at the address below or ISO's member body in the country of the requester.

ISO copyright office
Case postale 56 • CH-1211 Geneva 20
Tel. + 41 22 749 01 11
Fax + 41 22 749 09 47
E-mail copyright@iso.org
Web www.iso.org

Published in Switzerland

© ISO 2003 — All rights reserved

Contents

Page

Foreword ... iv
1 Scope ... 1
2 Normative references ... 1
3 Terms and definitions ... 1
4 Symbols ... 3
5 Principle ... 4
6 Apparatus ... 5
7 Test specimens ... 6
7.1 Specimen size, preparation and edge chamfering ... 6
7.2 Number of specimens ... 6
8 Procedure ... 7
8.1 Introduction of the precrack by Knoop indentation ... 7
8.2 Specimen fracture ... 11
8.3 Crack size measurement ... 12
8.4 Environmental effects ... 13
8.5 Optional: Estimate of R-curve behaviour ... 14
8.6 Optional: Reference materials ... 14
9 Calculation ... 14
10 Test report ... 15
Annex A (informative) **Environmental effects** ... 17
Annex B (normative) **Precrack characterization** ... 18
Annex C (informative) **R-curve estimation by the SCF method** ... 25
Annex D (normative) **Chamfer correction factors** ... 27
Bibliography ... 29

iTeh STANDARD PREVIEW
(standards.iteh.ai)
ISO 18756:2003
https://standards.iteh.ai/catalog/standards/sist/014c9b37-ea7a-4630-a95c-ab7589a08a0/iso-18756-2003

© ISO 2003 — All rights reserved

Foreword

ISO (the International Organization for Standardization) is a worldwide federation of national standards bodies (ISO member bodies). The work of preparing International Standards is normally carried out through ISO technical committees. Each member body interested in a subject for which a technical committee has been established has the right to be represented on that committee. International organizations, governmental and non-governmental, in liaison with ISO, also take part in the work. ISO collaborates closely with the International Electrotechnical Commission (IEC) on all matters of electrotechnical standardization.

International Standards are drafted in accordance with the rules given in the ISO/IEC Directives, Part 2.

The main task of technical committees is to prepare International Standards. Draft International Standards adopted by the technical committees are circulated to the member bodies for voting. Publication as an International Standard requires approval by at least 75 % of the member bodies casting a vote.

Attention is drawn to the possibility that some of the elements of this document may be the subject of patent rights. ISO shall not be held responsible for identifying any or all such patent rights.

ISO 18756 was prepared by Technical Committee ISO/TC 206, *Fine ceramics*.

iTeh STANDARD PREVIEW
(standards.iteh.ai)

ISO 18756:2003
https://standards.iteh.ai/catalog/standards/sist/014c9b37-ea7a-4630-a95c-aeb7589a08e0/iso-18756-2003

© ISO 2003 — All rights reserved

Fine ceramics (advanced ceramics, advanced technical ceramics) — Determination of fracture toughness of monolithic ceramics at room temperature by the surface crack in flexure (SCF) method

1 Scope

This International Standard describes a test method that covers the determination of fracture toughness of monolithic ceramic materials at room temperature by the surface crack in flexure (SCF) method.

This International Standard is intended for use with monolithic ceramics and whisker- or particulate-reinforced ceramics that are regarded as macroscopically homogeneous. It does not include continuous-fibre reinforced ceramic composites.

The test method is applicable to materials with either flat or rising crack growth resistance curves. This method is similar to ISO 15732 except that precracks are smaller and are made by a different procedure. The methods should produce similar or identical results for materials with a flat R-curve.

iTeh STANDARD PREVIEW
(standards.iteh.ai)

NOTE This test method is usually applicable to ceramic materials with a fracture toughness less than ≈ 10 MPa $m^{1/2}$. It may be difficult to form precracks with a Knoop indenter for materials with greater fracture toughness or those materials which are soft (low hardness) such as some zirconias, or for porous ceramics.

ISO 18756:2003
https://standards.iteh.ai/catalog/standards/sist/014c9b37-ea7a-4630-a95c-aeb7589a08e0/iso-18756-2003

2 Normative references

The following referenced documents are indispensable for the application of this document. For dated references, only the edition cited applies. For undated references, the latest edition of the referenced document (including any amendments) applies.

ISO 3611:1978, *Micrometer callipers for external measurement*

ISO 7500-1:—[1)], *Metallic materials — Verification of static uniaxial testing machines — Part 1: Tension/compression testing machines — Verification and calibration of the force-measuring system*

ISO 14704:2000, *Fine ceramics (advanced ceramics, advanced technical ceramics) — Test method for flexural strength of monolithic ceramics at room temperature*

3 Terms and definitions

For the purposes of this document, the following terms and definitions apply.

1) To be published. (Revision of ISO 7500-1:1999)

© ISO 2003 — All rights reserved

3.1
stress intensity factor
K_I
magnitude of the elastic stress field singularity at the tip of a crack subjected to opening mode displacement

NOTE It is a function of applied force and test specimen size, geometry and crack length, and has dimensions of force times length to the power of three over two.

3.2
fracture toughness
generic term for measures of resistance of extension of a crack

3.3
fracture toughness value
K_{Isc}
fracture toughness value measured by the SCF method

NOTE This is the measured stress intensity factor corresponding to the crack extension resistance of a semi-elliptical small crack formed underneath a Knoop indentation. The measurement is performed to the operational procedure herein and satisfies all the validity requirements.

3.4
precrack
crack introduced into the test specimen artificially prior to testing the specimen to fracture

3.5
crack front line
line to indicate the position of the tip of the crack

iTeh STANDARD PREVIEW
(standards.iteh.ai)

3.6
critical stress intensity factor
K_{Ic}
critical value of K_I at which fast fracture occurs

ISO 18756:2003
https://standards.iteh.ai/catalog/standards/sist/014c9b37-ea7a-4630-a95c-aeb7589a08e0/iso-18756-2003

3.7
critical crack
crack at fracture at maximum load and whose stress intensity factor just reaches the critical stress intensity factor

3.8
critical crack size
size of the critical crack at fracture

NOTE The critical crack will be larger than the precrack if stable crack extension occurs due to environmentally-assisted slow crack growth or rising R-curve behaviour.

3.9
four-point 1/4-point flexure
specific configuration of four-point flexural strength testing where the inner bearings are situated one quarter of the support span away from the two outer bearings

3.10
four-point 1/3-point flexure
specific configuration of four-point flexural strength testing where the inner bearings are situated one third of the support span away from the two outer bearings

3.11
flexural strength
maximum nominal stress at fracture of a specified elastic beam loaded in bending

© ISO 2003 — All rights reserved

4 Symbols

a	Crack depth
A	Flexure fixture moment arm
B	Specimen width, the cross section dimension perpendicular to the direction of loading in bending
c	Crack half width
C	Chamfer size
d	Length of Knoop indentation long diagonal
h	Depth of Knoop indentation
F	Knoop indentation load
F_c	Chamfer correction factor
H_1 (a/c, a/W)	A polynomial in the stress intensity factor coefficient, for the point on the crack periphery where it intersects the specimen surface
H_2 (a/c, a/W)	A polynomial in the stress intensity factor coefficient, for the deepest part of the surface crack
K_I	Stress intensity factor, Mode I
K_{Ic}	Critical stress intensity factor, Mode I
K_{Isc}	Fracture toughness value, surface crack in flexure method
L	Flexure fixture support span
L_T	Specimen length
M (a/c, a/W)	A polynomial in the stress intensity factor coefficient
P	Load at fracture
Q (a/c)	A polynomial function of the surface crack ellipticity
S (a/c, a/W)	Factor in the stress intensity factor coefficient
W	Specimen depth, the cross section dimension parallel to the direction of loading in bending
Y	Stress intensity factor coefficient
Y_d	Stress intensity factor coefficient at the deepest part of the surface crack
Y_{max}	The maximum stress intensity factor coefficient along the boundary of the surface crack
Y_s	Stress intensity factor coefficient at the intersection of the surface crack with the specimen surface

iTeh STANDARD PREVIEW
(standards.iteh.ai)
ISO 18756:2003
https://standards.iteh.ai/catalog/standards/sist/014c9b37-ea7a-4630-a95c-aeb7589c08a0/iso-18756-2003

© ISO 2003 — All rights reserved

5 Principle

This International Standard is for material development, material comparison, quality assurance, characterization, reliability, and design data generation. The method determines the fracture toughness value, K_{Isc} by fracturing a common flexure specimen which has a small surface precrack (see Figure 1). The specimen is indented with a Knoop indenter in order to make a small, semi-elliptical surface crack. The specimen is polished or ground carefully until the indentation and associated residual stress field are removed. The specimen is fractured in four-point flexure. The fracture toughness, K_{Isc}, is calculated from the fracture load and the measured critical crack size. Fractography is required to measure the precrack size and to determine whether the crack has grown in size. Fracture toughness as a function of crack size may be evaluated by varying the Knoop indentation load that is used to make the precrack. Background information concerning this test method may be found in References [1] and [2]. An international interlaboratory comparison study (round robin) project on this method is described in References [3], [4] and [5].

If the ceramic is too soft (low hardness) or has too great a fracture toughness, it may be difficult to create a precrack by the SCF method. In addition, for some materials (particularly those with coarse grain or heterogeneous microstructures), it may be difficult to detect the crack on the fracture surface. If the user is not sure of the applicability of this method, then a single trial specimen may be tested with an abbreviated procedure. Indent the specimen and fracture it without removal of the indentation and residual stresses. Inspect the fracture surface to confirm that the specimen fractured from the precrack (and not from a material flaw) and that the precrack can be detected on the fracture surface.

Precracking is by Knoop indentation only in this International Standard. Residual stresses underneath the indentation are removed in this test method. There is some limited experience with SCF precracking by Vickers indentation [3, 4, 5, 6, 7]

iTeh STANDARD PREVIEW
(standards.iteh.ai)
ISO 18756:2003
https://standards.iteh.ai/catalog/standards/sist/014c9b37-ea7a-4630-a95c-aeb7589a08e0/iso-18756-2003

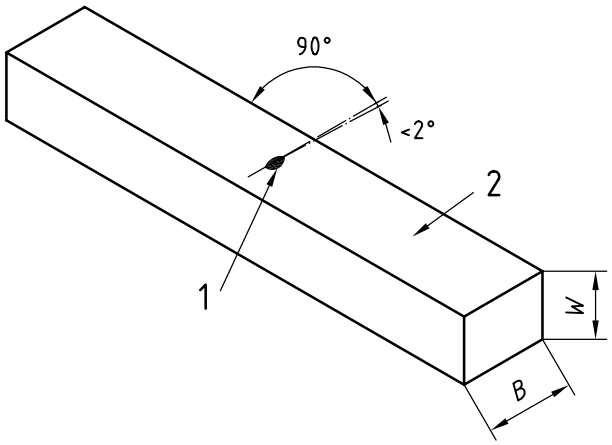

Key

1 indentation and precrack

2 polished or lapped surface

Figure 1 — Indentation and precrack in a flexural specimen

© ISO 2003 — All rights reserved

6 Apparatus

6.1 Testing machine, capable of applying a uniform cross-head speed. The testing machine shall be in accordance with ISO 7500-1:— Class 1 with an accuracy of 1 % of indicated load at fracture.

6.2 Flexural fixtures, four-point as shown in Figure 2. Flexural fixtures shall meet the requirements of ISO 14704.

The fixtures shall either be semi-articulating or fully-articulating depending upon the condition of the specimens. If the specimens meet the parallelism requirements of 7.1, then semi-articulating fixtures may be used. Semi-articulating fixtures are usually completely satisfactory for machined specimens. If the specimens do not meet the parallelism requirements of 7.1 (due to hand grinding unevenness, problems with machining, or other causes), then fully-articulating fixtures shall be used. Fully-articulating fixtures also may be used with machined specimens. Specimens shall be loaded and supported by bearings. The bearings shall be free to roll in order to eliminate friction. For four-point flexure, the two inner bearings shall be free to roll *inwards*, and the two outer bearings shall be free to roll *outwards.*

Four-point 1/4-point fixtures with 20 mm support span and 10 mm inner span are also permitted. Such fixtures shall meet the requirements of ISO 14704.

Dimensions in millimetres

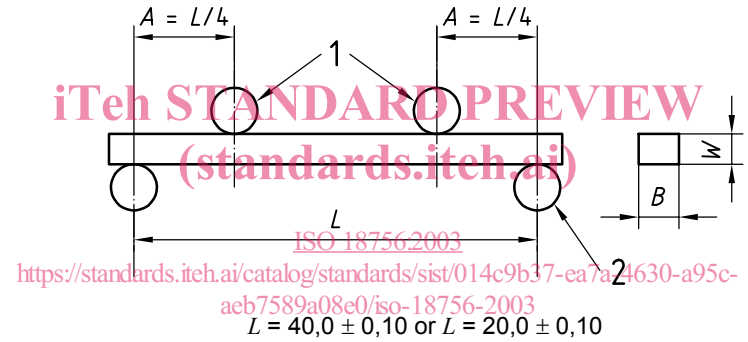

iTeh STANDARD PREVIEW
(standards.iteh.ai)
ISO 18756:2003
https://standards.iteh.ai/catalog/standards/sist/014c9b37-ea7a-4630-a95c-aeb7589a08e0/iso-18756-2003

L = 40,0 ± 0,10 or L = 20,0 ± 0,10

a) Four-point 1/4-point flexure

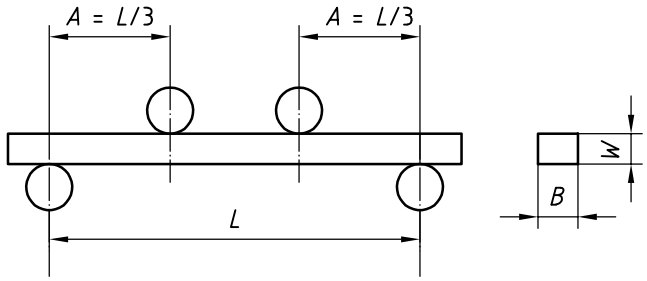

L = 30,0 ± 0,10

b) Four-point 1/3-point flexure

Key

1 loading bearings

2 support bearings

Figure 2 — Four-point flexure

© ISO 2003 — All rights reserved

6.3 Micrometer, such as described in ISO 3611 but with a resolution of 0,002 mm shall be used to measure the specimen dimensions. The micrometer shall have flat anvil faces such as shown in ISO 3611. The micrometer shall not have a ball tip or sharp tip since these might damage the specimen. Alternative dimension measuring instruments may be used provided that they have a resolution of 0,002 mm or finer.

6.4 Hardness testing machine, conventional type, to create the Knoop indentation. The machine shall be able to apply loads of 20 N to 50 N or greater. If a hardness machine with this load range is not available, then a strength testing machine (6.1) may be used although some loss of accuracy or control of indentation and crack size may result.

6.5 Microscopes, optical and/or scanning electron, shall be used to detect the precrack (or critical crack) and measure its size on the specimen fracture surface after the test. Magnifications of 100× to 500× are usually required. The microscope shall be capable of making photographic or digital records of the cracks.

6.6 Dye penetrants, to highlight the crack. Dye penetrants that do not promote slow crack growth nor bleed (spread on the fracture surface after fracture) are preferred.

6.7 Temperature measuring device, a thermometer or other device to measure ambient temperature during the fracture of the specimen.

6.8 Humidity measuring device, such as a hygrometer, sling psychrometer, or other device to measure ambient humidity during the fracture of the specimen.

7 Test specimens

iTeh STANDARD PREVIEW
(standards.iteh.ai)

7.1 Specimen size, preparation and edge chamfering

7.1.1 Rectangular beam specimens with dimensions as shown in Figure 3 shall be used. The cross-sectional tolerances are ± 0,2 mm. The parallelism tolerance on opposite longitudinal faces is 0,015 mm.

ISO 18756:2003
https://standards.iteh.ai/catalog/standards/sist/014c9b37-ea7a-4630-a95c-aeb7589a08e0/iso-18756-2003

7.1.2 Specimens shall be prepared in accordance with ISO 14704 with the exceptions noted below. The indentation may be placed in either a 3 mm or 4 mm wide face. A diamond-grit wheel 320 or finer shall be used to remove the last 0,04 mm on the surface that is used for the indentation. This surface shall be polished, lapped or fine ground to provide a flat, smooth surface for the surface crack.

NOTE The surface does not require a polished, high-quality finish such as required for a hardness measurement. The surface need only be flat so that the Knoop indentation is not affected by machining striations or marks, or specimen unevenness.

7.1.3 Chamfers or edge rounds are optional. If premature fracture occurs from edge damage, then the edges shall be chamfered or rounded as specified in ISO 14704. The chamfer size should be 0,15 mm or less. See Figure 3.

7.2 Number of specimens

The number of specimens shall be not less than five. It is recommended that at least ten specimens be prepared. This will provide specimens for practice tests to determine the best indentation loads and provide specimens to make up for unsuccessful or invalid tests. More specimens are needed if environment, testing rate, or precrack sizes are to be varied.

© ISO 2003 — All rights reserved

Dimensions in millimetres

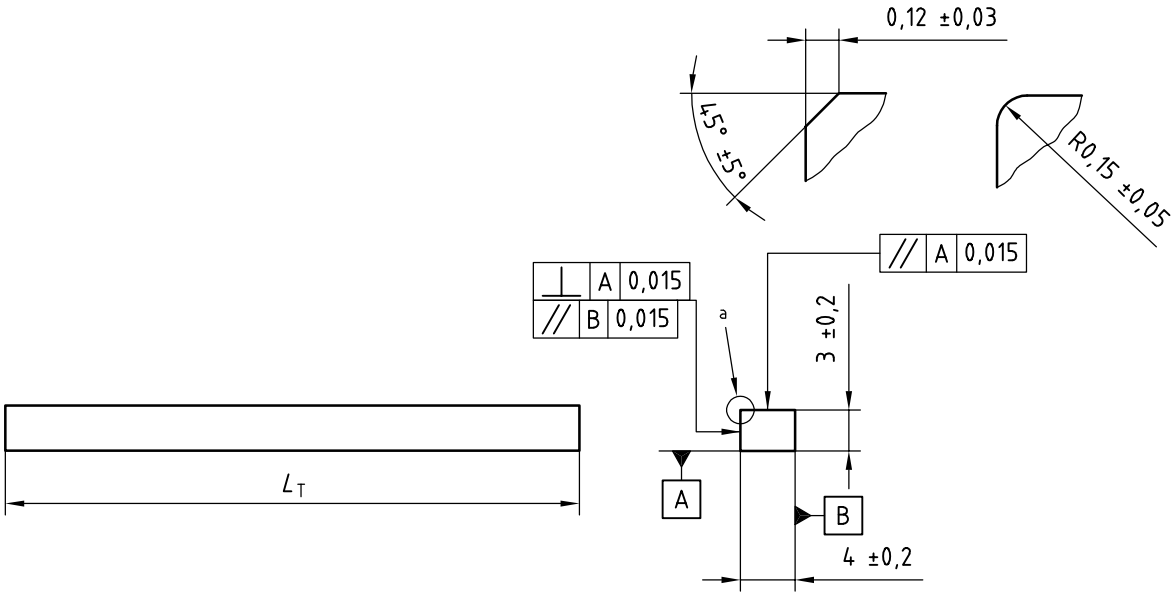

$L_T \geqslant 25$ for 20 mm test fixtures or
$L_T \geqslant 35$ for 30 mm test fixtures or
$L_T \geqslant 45$ for 40 mm test fixtures

[a] Edge chamfers or rounding.

iTeh STANDARD PREVIEW
(standards.iteh.ai)

Figure 3 — Test specimen dimensions

ISO 18756:2003
https://standards.iteh.ai/catalog/standards/sist/014c9b37-ea7a-4630-a95c-aeb7589a08e0/iso-18756-2003

8 Procedure

8.1 Introduction of the precrack by Knoop indentation

8.1.1 Use a Knoop indenter to indent the middle of the polished, lapped or fine ground surface of the specimen. The indentation shall be perpendicular to the specimen long axis to within 2° as shown in Figure 1. One end of the specimen shall be tilted approximately 0,25° to 0,5° as shown in Figure 4. A full load dwell time of 15 s or more during the indentation cycle shall be used. The indentation may be placed in either a 3 mm or 4 mm wide face as shown in Figure 5. It is recommended that the indentation be placed near to the exact centre of the surface, both along the width dimension B and along the specimen length, in order to make it easy to confirm that fracture occurs from the precrack.

NOTE 1 The 0,25° to 0,5° tilt makes the precrack easier to detect on the fracture surface. The specimen tilt causes precrack tilts from 0° to 5°.

NOTE 2 In some instances such as with zirconia, indentation times longer than 15 s may be helpful.

NOTE 3 A trial specimen may be tested to help determine the best indentation load. Indent then fracture the specimen in the flexure fixtures without removal of the indentation and residual stress damage zone. Examine the fracture surface to confirm that the specimen has fractured from the precrack, that the precrack is discernible, and within the prescribed size limits.

NOTE 4 The Knoop indentation procedure to create a surface crack will not be successful on very soft or porous ceramics since a precrack will not form under the indentation. The process may not work on very tough ceramics which are resistant to the formation of cracks, or where the cracks are very small and likely to be removed during the subsequent polishing step to remove the residual stress and damage zone.

© ISO 2003 — All rights reserved

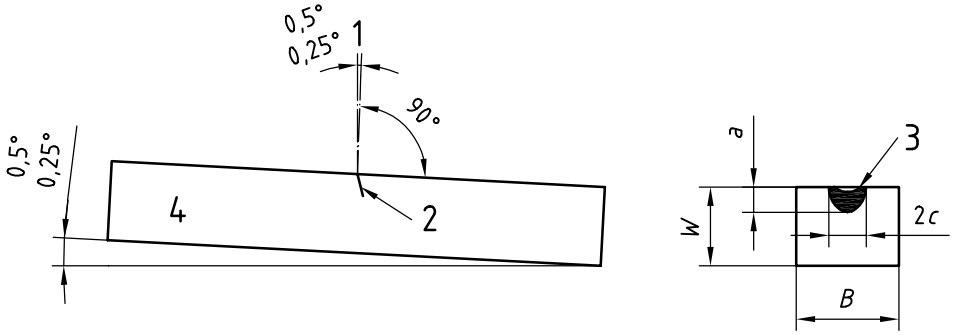

a) Specimen side view b) Specimen end view

Key

1 Knoop indenter
2 precrack
3 indent with precrack
4 platform tilts specimen

Figure 4 — Indentation of the precrack by Knoop indentation

iTeh STANDARD PREVIEW
(standards.iteh.ai)
ISO 18756:2003
https://standards.iteh.ai/catalog/standards/sist/014c9b87-ea7a-4630-a95c-aeb7589a08e0/iso-18756-2003

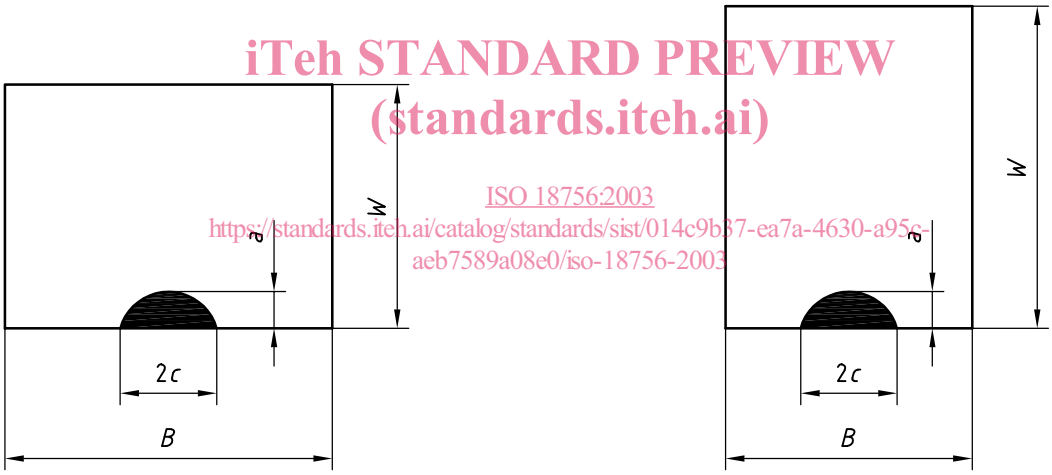

NOTE 1 The indentation may be placed on either the wide 4 mm face or the narrow 3 mm face.

NOTE 2 The crack size has been exaggerated for illustrative purposes and is usually much smaller.

Figure 5 — Specimen cross section

8.1.2 The optimum indentation load used may have to be determined for each different class of material by the use of a few trial specimens. The load shall be sufficient to create a crack that is larger than the naturally-occurring flaws in the material, but not too large relative to the specimen cross section size ($2c < 0{,}5B$ and $a < 0{,}5W$) nor so large that the indentation is badly spalled or shattered. Indentation loads of approximately 20 N are suitable for very brittle ceramics, 25 N to 50 N for medium tough ceramics, and 49 to 98 N for very tough ceramics or ceramics with some porosity. Indentation loads of 98 N to 147 N may be necessary for materials with medium- to coarse-grain sizes. In such materials, it is necessary to make large precracks that will stand out against the normal microstructural roughness on the fracture surface.

8.1.3 Measure the length of the long diagonal, d, of the Knoop impression to within 0,005 mm (5 µm).

© ISO 2003 — All rights reserved