SLOVENSKI STANDARD
SIST EN 301 841-1 V1.3.1:2010

01-oktober-2010

Digitalne povezave VHF zrak-tla, 2. način - Tehnične karakteristike in merilne metode za talno opremo - 1. del: Fizična plast in podplast MAC

VHF air-ground Digital Link (VDL) Mode 2 - Technical characteristics and methods of measurement for ground-based equipment - Part 1: Physical layer and MAC sub-layer

Ta slovenski standard je istoveten z: EN 301 841-1 Version 1.3.1

ICS:

33.060.99	Druga oprema za radijske komunikacije	Other equipment for radiocommunications
35.100.10	Fizični sloj	Physical layer

SIST EN 301 841-1 V1.3.1:2010 en

ETSI EN 301 841-1 V1.3.1 (2010-06)

European Standard (Telecommunications series)

VHF air-ground Digital Link (VDL) Mode 2; Technical characteristics and methods of measurement for ground-based equipment; Part 1: Physical layer and MAC sub-layer

Reference
REN/AERO-00004

Keywords
aeronautical, radio, testing

ETSI

650 Route des Lucioles
F-06921 Sophia Antipolis Cedex - FRANCE

Tel.: +33 4 92 94 42 00 Fax: +33 4 93 65 47 16

Siret N° 348 623 562 00017 - NAF 742 C
Association à but non lucratif enregistrée à la
Sous-Préfecture de Grasse (06) N° 7803/88

Important notice

Individual copies of the present document can be downloaded from:
http://www.etsi.org

The present document may be made available in more than one electronic version or in print. In any case of existing or perceived difference in contents between such versions, the reference version is the Portable Document Format (PDF). In case of dispute, the reference shall be the printing on ETSI printers of the PDF version kept on a specific network drive within ETSI Secretariat.

Users of the present document should be aware that the document may be subject to revision or change of status. Information on the current status of this and other ETSI documents is available at
http://portal.etsi.org/tb/status/status.asp

If you find errors in the present document, please send your comment to one of the following services:
http://portal.etsi.org/chaircor/ETSI_support.asp

Copyright Notification

Contents

Intellectual Property Rights

IPRs essential or potentially essential to the present document may have been declared to ETSI. The information pertaining to these essential IPRs, if any, is publicly available for **ETSI members and non-members**, and can be found in ETSI SR 000 314: *"Intellectual Property Rights (IPRs); Essential, or potentially Essential, IPRs notified to ETSI in respect of ETSI standards"*, which is available from the ETSI Secretariat. Latest updates are available on the ETSI Web server (http://webapp.etsi.org/IPR/home.asp).

Pursuant to the ETSI IPR Policy, no investigation, including IPR searches, has been carried out by ETSI. No guarantee can be given as to the existence of other IPRs not referenced in ETSI SR 000 314 (or the updates on the ETSI Web server) which are, or may be, or may become, essential to the present document.

Foreword

This European Standard (Telecommunications series) has been produced by ETSI Technical Committee Aeronautics (AERO).

The present document is part 1 of a multi-part deliverable covering VHF air-ground Digital Link (VDL) Mode 2; Technical characteristics and methods of measurement for ground-based equipment, as identified below:

Part 1: "Physical layer and MAC sub-layer";

Part 2: "Upper layers".

National transposition dates	
Date of adoption of this EN:	25 May 2010
Date of latest announcement of this EN (doa):	31 August 2010
Date of latest publication of new National Standard or endorsement of this EN (dop/e):	28 February 2011
Date of withdrawal of any conflicting National Standard (dow):	28 February 2011

Introduction

The present document states the technical specifications for ground-based equipment implementing Very High Frequency (VHF) Digital Link (VDL) Mode 2 air interface, operating in the VHF band (117,975 MHz to 137,000 MHz) with 25 kHz channel spacing.

Manufacturers should note that in the future, all or part of the frequency band 108,000 MHz to 117,975 MHz may become available for aeronautical communications.

The present document may be used to produce tests for the assessment of the performance of the equipment. The performance of the equipment submitted for type testing should be representative of the performance of the corresponding production model.

The present document has been written on the assumption that:

- the type test measurements will be performed only once, in an accredited test laboratory, and the measurements accepted by the various authorities in order to grant type approval;
- if equipment available on the market is required to be checked it may be tested in accordance with the methods of measurement specified in the present document.

1 Scope

The present document applies to VDL Mode 2 ground-air digital communications using Differential Eight Phase Shift Keying (D8PSK), intended for channel increments of 25 kHz. The VDL Mode 2 system provides data communication exchanges between aircraft and ground-based systems. The scope of the present document is limited to ground-based stations.

The VDL Mode 2 system is designed to be a Ground/Air sub-system of the Aeronautical Telecommunication Network (ATN) using the AM(R)S band and it is organized according to the Open Systems Interconnection (OSI) model (defined by ISO). It shall provide reliable subnetwork services to the ATN system.

The present document provides functional specifications for ground-based radio equipment intended to be used for ground-air data communications. The present document is derived from the following documents:

- VDL Mode 2 SARPs version 3.0. ICAO Annex 10 Volume III part I [2].
- ED 92a [3]: "MOPS for an Airborne VDL Mode-2 Transceiver Operating in the frequency range 118-136.975 MHz" (2003), which specifies the airborne transceiver.

The present document consists of two parts:

- the first part provides functional specifications and test procedures for physical layer and MAC sub-layer;
- the second part provides functional specifications and test procedures for link and sub-network access layers.

2 References

References are either specific (identified by date of publication and/or edition number or version number) or non-specific. For specific references, only the cited version applies. For non-specific references, the latest version of the reference document (including any amendments) applies.

Referenced documents which are not found to be publicly available in the expected location might be found at http://docbox.etsi.org/Reference.

NOTE: While any hyperlinks included in this clause were valid at the time of publication ETSI cannot guarantee their long term validity.

2.1 Normative references

The following referenced documents are necessary for the application of the present document.

[1] ICAO Convention on International Civil Aviation: "Annex 10 - Aeronautical Telecommunications, Volume III - Communication Systems, Part I - Digital Data Communication Systems, Second Edition, July 2007, incorporating Amendments 70-84 (July 2007), Amendment 84 (applicable 19/11/09). Chapter 6 - VHF Air-ground Digital Link (VDL)".

[2] ICAO Convention on International Civil Aviation: "Annex 10 - Aeronautical Telecommunications, Volume V - Aeronautical Radio Frequency Spectrum Utilization".

[3] EUROCAE ED 92a (2003): "MOPS for an Airborne VDL Mode-2 Transceiver operating in the frequency range 118-136.975 MHz".

[4] ISO/IEC 13239: "Information technology - Telecommunications and information exchange between systems - High-level data link control (HDLC) procedures".

[5] ISO/IEC 8208: "Information technology - Data communications - X.25 Packet Layer Protocol for Data Terminal Equipment".

[6] ISO/IEC 7498-1 (1994): "Information technology - Open Systems Interconnection - Basic Reference Model: The Basic Model".

[7] ISO/IEC 10731 (1994): "Information technology - Open Systems Interconnection - Basic Reference Model - Conventions for the definition of OSI services".

[8] ETSI EN 300 113-1: "Electromagnetic compatibility and Radio spectrum Matters (ERM); Land mobile service; Radio equipment intended for the transmission of data (and/or speech) using constant or non-constant envelope modulation and having an antenna connector; Part 1: Technical characteristics and methods of measurement".

[9] ICAO Document 9776/AN970 (first edition, 2001): "Manual on VHF Digital Link (VDL) Mode 2".

2.2 Informative references

The following referenced documents are not necessary for the application of the present document but they assist the user with regard to a particular subject area.

[i.1] ETSI EN 301 841-2: "Electromagnetic compatibility and Radio spectrum Matters (ERM); VHF air-ground Digital Link (VDL) Mode 2; Technical characteristics and methods of measurement for ground-based equipment; Part 2: Upper layers".

3 Definitions and abbreviations

3.1 Definitions

3.1.1 Basic reference model definitions

The present document is based on the concepts developed in the open systems interconnect basic reference model and makes use of the following terms defined in ISO/IEC 7498-1 [6]:

- layer;
- sublayer;
- entity;
- service;
- service access point;
- service data unit;
- physical layer;
- data link layer.

3.1.2 Service conventions definitions

For the purposes of the present document, the terms and definitions given in ISO/IEC 10731 [7] apply:

- service provider;
- service user;
- service primitive;
- request;
- indication;

- confirm.

3.1.3 General definitions

For the purposes of the present document, the following terms and definitions apply:

adjacent channel power: amount of the modulated RF signal power transmitted outside of the assigned channel

NOTE: Adjacent channel power includes discrete spurious, signal sidebands, and noise density (including phase noise) at the transmitter output.

adjacent channel rejection: receiver's ability to demodulate the desired signal and meet the uncorrected BER requirement in the presence of an interfering signal in an adjacent channel

NOTE: The ratio (in dB) between the adjacent interfering signal level and the desired signal level necessary to achieve the specified minimum uncorrected BER, is the adjacent channel rejection (ACR) ratio.

aeronautical mobile service: mobile service between aeronautical stations and aircraft stations, or between aircraft stations, in which survival craft stations may participate

average transmitter output power: average power supplied to the antenna transmission line by a transmitter during an interval of time sufficiently long, compared with the lowest frequency encountered in the modulation, taken under normal operating conditions

Bit Error Rate (BER): ratio between the number of erroneous bits received and the total number of bits received

NOTE: The uncorrected BER represents the BER without the benefit of Forward Error Correction (FEC).

Co-Channel Interference (CCI): capability of a receiver to demodulate the desired signal and achieve the minimum specified BER performance in the presence of an unwanted signal at the same assigned channel

NOTE: The ratio (in dB) between the wanted signal level and the unwanted signal level is the co-channel interference ratio.

conducted measurements: measurements which are made using a direct rf connection to the equipment under test

data rate: VDL Mode 2 symbol rate shall be 10 500 symbols/s, with a nominal data rate of 31 500 bits/s

ground base station: aeronautical station equipment, in the aeronautical mobile service, for use with an external antenna and intended for use at a fixed location

interleaver: creates the AVPL_TIRS sequence made from the block segmentation of the AVLC frame and the RS encoding

NOTE: To this end one assumes the TIRS matrix made from the RS encoding of the AVLC block segmentation. The TIRS matrix is a matrix of octets made of 255 columns and c rows.

spurious emissions: conducted rf emissions on a frequency or frequencies which are outside the necessary bandwidth and the level of which may be reduced without affecting the corresponding transmission of information

NOTE: Spurious emissions include parasitic emissions, intermodulation products and frequency conversion products.

X 25: ITU-T standard for the protocols and message formats that define the interface between a terminal and a packet switching network

3.2 Abbreviations

For the purposes of the present document, the following abbreviations apply:

ACR	Adjacent Channel Rejection
AGC	Automatic Gain Control
AM(R)S	Aeronautical Mobile (Route) Service
ATN	Aeronautical Telecommunication Network
AVLC	Aviation VHF Link Control
AVLC_LI	Aviation VHF Link Control Length Indicator
AVPL	Aviation VHF Physical Layer
AVPL-Header	AVPL Header and training sequence
AVPL-TBS	AVPL Transmitted Bit Scrambled sequence
AVPL-THeader	AVPL Transmission Header sequence
AVPL-THI	AVPL Transmitted Header appended and Interleaved sequence
AVPL-TIRS	AVPL Transmitted Interleaved RS encoded sequence
AVPL-TTS	AVPL Transmitted Ternary Symbol sequence
AWG	Arbitrary Waveform Generator
BER	Bit Error Rate
CCI	Co Channel Interference
CRC	Cyclic Redundancy Check
CSMA	Carrier Sense Multiple Access
CW	Continuous Wave
D8PSK	Differentially encoded 8 Phase Shift Keying
dBc	Decibels relative to the carrier
dBm	Decibels relative to 1 milliwatt
DLS	Data Link Service
EVM	Error Vector Magnitude
FCS	Frame Check Sequence
FEC	Forward Error Correction
FM	Frequency Modulation
HDLC	High-level Data Link Control
ICAO	International Civil Aviation Organization
ID	IDentification (identifier)
IS	Intermediate System
ISO	International Organization for Standardization
LME	Link Management Entity
MAC	Media Access Control
OSI	Open Systems Interconnection
ppm	parts per million
RMS	Root Mean Square
RS	Reed-Solomon
SAP	Service Access Point
SARPS	Standards And Recommended PracticeS (ICAO)
SNAcP	SubNetwork Access Protocol
SQP	Signal Quality Parameter
TIRS matrix	Transmission Interleaver and RS encoding matrix
VDL	VHF Digital Link
VHF	Very High Frequency
VME	VDL Management Entity
VSA	Vector Signal Analyser
VSWR	Voltage Standing Wave Radio
XID	Exchange ID (frame)

4 General architecture of VDL Mode 2

The general architecture of the VHF radio equipment operating in VDL Mode 2 is depicted in figure 1. This figure presents the different functional parts of the VDL Mode 2 equipment.

The VDL system is related to the three lower layers of the OSI model providing services described as follows:

Layer 1 (Physical layer): provides transceiver frequency control, bit exchanges over the radio media, and notification functions. These functions are often known as radio and modulation functions. The physical layer handles information exchanges at the lowest level and manipulates bits. The physical layer handles modulation, data encoding and includes a forward error correction mechanism based on interleaving and Reed Solomon coding.

Layer 2 (Link Layer): is split into two sublayers and a link management entity:

- The MAC sublayer provides access to the Physical layer by a CSMA algorithm in charge of channel access. The MAC layer controls channel access and sharing.
- The DLS sublayer is composed of the AVLC derived from the HDLC protocol (ISO/IEC 13239 [4]) whose main functions are frame exchanges, frame processing, and error detection.
- The LME controls the link establishment and maintenance between DLS sublayers.

Layer 3: Only the lowest network sublayer of layer 3 (SNAcP) will be described in EN 301 841-2 [i.1]. It is compliant with the subnetwork sublayer requirements defined in the ATN SARPs and conforms with the ISO/IEC 8208 [5] (or network layer of X.25). It provides packet exchanges over a virtual circuit, error recovery, connection flow control, packet fragmentation, and subnetwork connection management functions.

The DLS and LME part of the Layer 2 and Layer 3 are specified in EN 301 841-2 [i.1].

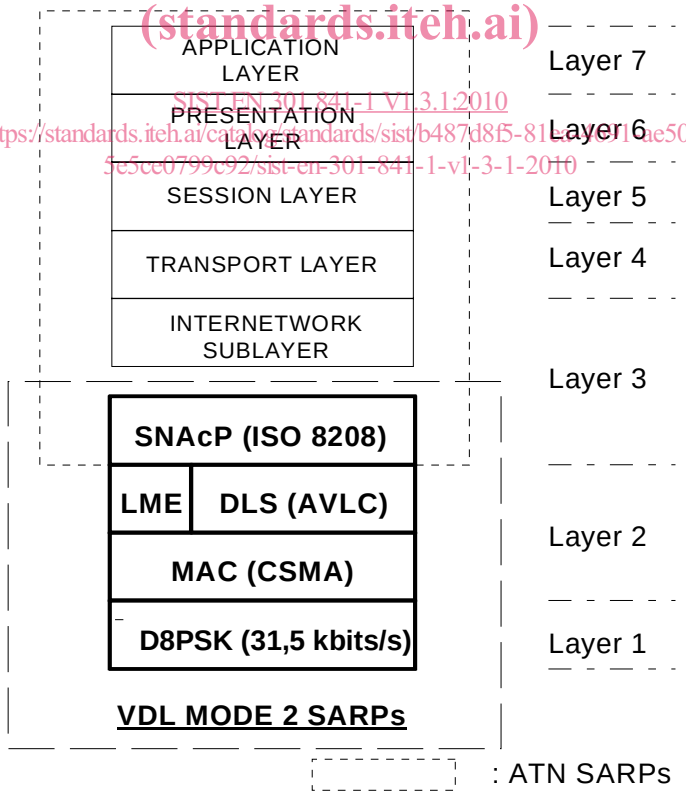

Figure 1: VDL SARPS in the ATN/OSI Organization

5 Physical layer protocols and services functional specifications

5.1 Overview

The ground stations shall access the physical layer operating in simplex mode.

5.1.1 Functions

The tasks of the physical layer include the following:

- to modulate and demodulate radio carriers with a bit stream of a defined instantaneous rate to create an rf link;
- to acquire and maintain bit and burst synchronization between Transmitters and Receivers;
- to transmit or receive a defined number of bits at a requested time (packet mode) and on a particular carrier frequency;
- to add and remove a training sequence;
- to encode and decode the Forward Error Correction scheme;
- to measure received signal strength;
- to decide whether a channel is idle or busy, for the purposes of managing channel access attempts;
- to offer a notification service about the quality of link.

5.1.2 Data reception by the receiver

The receiver shall decode input signals and forward them to the higher layers for processing.

5.1.3 Data transmission

The VDL physical layer shall appropriately encode the data received from the data link layer and transmit it over the rf channel.

5.2 Transmission procedure

To transmit a sequence of frames, a station shall insert the bit numbers and, compute the FEC, interleave, insert the training sequence, carry out bit scrambling, and finally encode and modulate the rf signal. See figure 2.

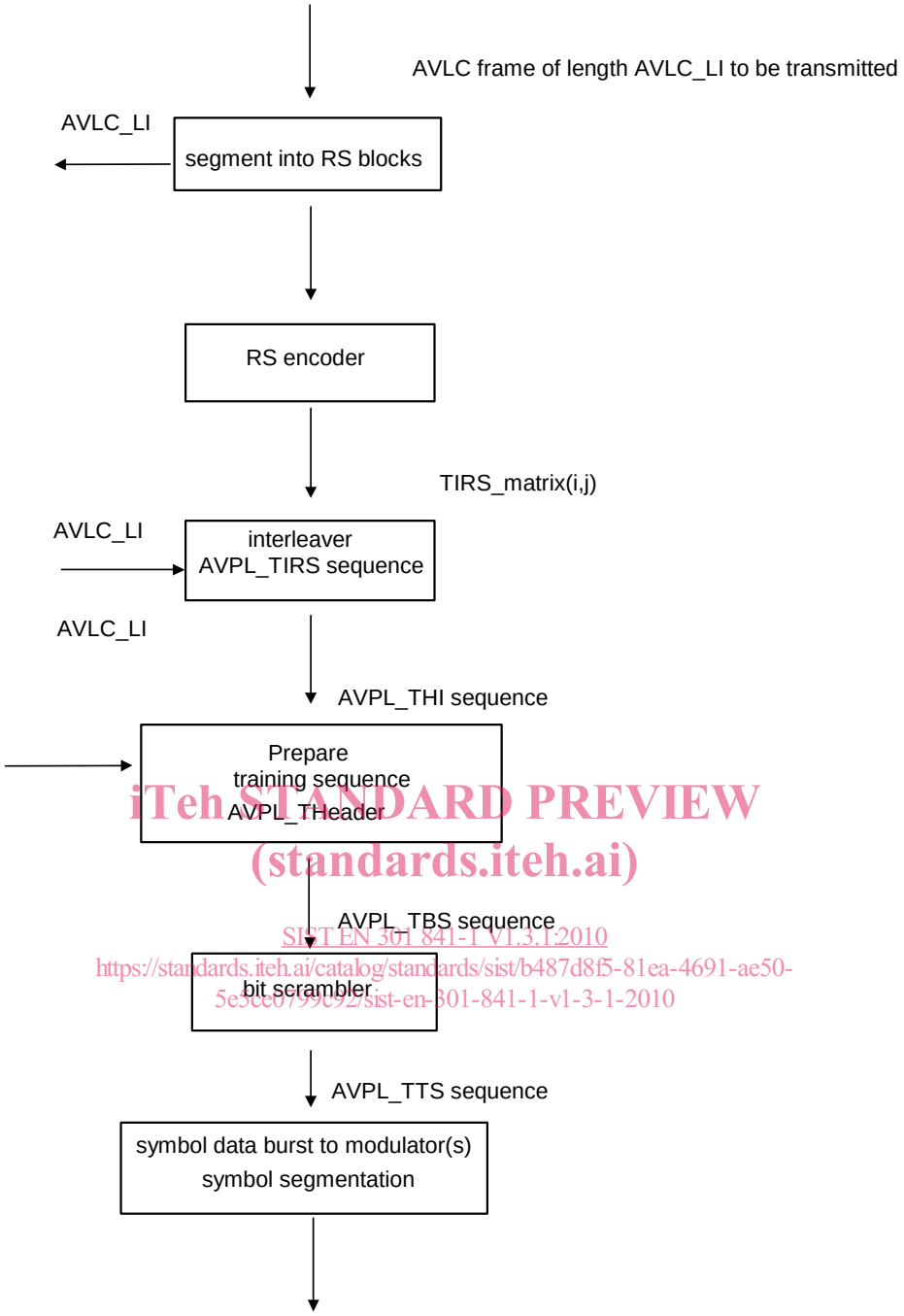

Figure 2: Data burst formatting procedure

5.3 Modulation scheme

Mode 2 shall use D8PSK, using a raised cosine filter with $\alpha = 0,6$ (nominal value). The information to be transmitted shall be differentially encoded with 3 bits per symbol transmitted as changes in phase rather than absolute phase. The data stream to be transmitted shall be divided into groups of 3 consecutive data bits, with the least significant bit first. Zeros shall be padded to the end of the transmissions if needed for the final channel symbol.