SLOVENSKI STANDARD
oSIST prEN 360:2016

01-april-2016

Osebna varovalna oprema za zaščito pred padci z višine - Samonavijalna zaustavitvena naprava

Personal protective equipment against falls from a height - Retractable type fall arresters

Persönliche Schutzausrüstung gegen Absturz - Höhensicherungsgeräte

Equipement de protection individuelle contre les chutes de hauteur - Antichutes à rappel automatique

Ta slovenski standard je istoveten z: prEN 360

ICS:

13.340.60	Zaščita pred padci in zdrsi	Protection against falling and slipping

oSIST prEN 360:2016 **en,fr,de**

EUROPEAN STANDARD

NORME EUROPÉENNE

EUROPÄISCHE NORM

DRAFT
prEN 360

February 2016

ICS 13.340.60

Will supersede EN 360:2002

English Version

Personal protective equipment against falls from a height - Retractable type fall arresters

Equipement de protection individuelle contre les chutes de hauteur - Antichutes à rappel automatique

Persönliche Schutzausrüstung gegen Absturz - Höhensicherungsgeräte

This draft European Standard is submitted to CEN members for enquiry. It has been drawn up by the Technical Committee CEN/TC 160.

If this draft becomes a European Standard, CEN members are bound to comply with the CEN/CENELEC Internal Regulations which stipulate the conditions for giving this European Standard the status of a national standard without any alteration.

This draft European Standard was established by CEN in three official versions (English, French, German). A version in any other language made by translation under the responsibility of a CEN member into its own language and notified to the CEN-CENELEC Management Centre has the same status as the official versions.

CEN members are the national standards bodies of Austria, Belgium, Bulgaria, Croatia, Cyprus, Czech Republic, Denmark, Estonia, Finland, Former Yugoslav Republic of Macedonia, France, Germany, Greece, Hungary, Iceland, Ireland, Italy, Latvia, Lithuania, Luxembourg, Malta, Netherlands, Norway, Poland, Portugal, Romania, Slovakia, Slovenia, Spain, Sweden, Switzerland, Turkey and United Kingdom.

Recipients of this draft are invited to submit, with their comments, notification of any relevant patent rights of which they are aware and to provide supporting documentation.

Warning : This document is not a European Standard. It is distributed for review and comments. It is subject to change without notice and shall not be referred to as a European Standard.

EUROPEAN COMMITTEE FOR STANDARDIZATION
COMITÉ EUROPÉEN DE NORMALISATION
EUROPÄISCHES KOMITEE FÜR NORMUNG

CEN-CENELEC Management Centre: Avenue Marnix 17, B-1000 Brussels

Ref. No. prEN 360:2016 E

Contents

Page

European foreword

This document (prEN 360:2016) has been prepared by Technical Committee CEN/TC CEN/ TC 160 “Personal fall protection equipment — Retractable type fall arresters”, the secretariat of which is held by DIN.

This document is currently submitted to the CEN Enquiry.

This document will supersede EN 360:2002.

This document has been prepared under a mandate given to CEN by the European Commission and the European Free Trade Association, and supports essential requirements of EU Directive(s).

For the relationship with EU Directive(s) see informative Annex ZA, which is an integral part of this document.

1 Scope

This European Draft specifies requirements, test methods, marking, information supplied by the manufacturer for retractable type fall arresters. Retractable type fall arresters conforming to this European Standard are components of one of the fall arrest systems covered by EN 363. Other types of fall arresters are specified in EN 353-1 and EN 353-2.

This European Draft applies to retractable type fall arresters which are intended to be used:

— vertically (overhead) up to a maximum angle of 45° from the true vertical (see Figure 1);

— vertically (overhead) up to a maximum angle of 45° from the true vertical and horizontally (see Figure 2a and Figure 2b).

2 Normative references

The following documents, in whole or in part, are normatively referenced in this document and are indispensable for its application. For dated references, only the edition cited applies. For undated references, the latest edition of the referenced document (including any amendments) applies.

EN 361, *Personal protective equipment against falls from a height - Full body harnesses*

EN 362, *Personal protective equipment against falls from a height - Connectors*

EN 364:1992, *Personal protective equipment against falls from a height - Test methods*

EN 365, *Personal protective equipment against falls from a height - General requirements for instructions for use, maintenance, periodic examination, repair, marking and packaging*

EN 795, *Personal fall protection equipment - Anchor devices*

EN 10025-2, *Hot rolled products of structural steels - Part 2: Technical delivery conditions for non-alloy structural steels*

EN 10083-2, *Steels for quenching and tempering - Part 2: Technical delivery conditions for non alloy steels*

EN 10278, *Dimensions and tolerances of bright steel products*

EN 12385-4, *Steel wire ropes - Safety – Part 4: Stranded ropes for general lifting applications*

3 Terms and definitions

For the purposes of this document, the following terms and definitions apply.

3.1
retractable type fall arrester
single fall arrester with a self-locking function and an automatic tensioning and return facility for a single lanyard, i.e. retractable lanyard

Note 1 to entry: An energy dissipating element may be incorporated in the retractable type fall arrester itself or in the retractable lanyard.

3.2
retractable type fall arrester – Type A
single fall arrester with a self-locking function and an automatic tensioning and return facility for a single lanyard, i.e. retractable lanyard, for vertical use.

Note 1 to entry: See Figure 1.

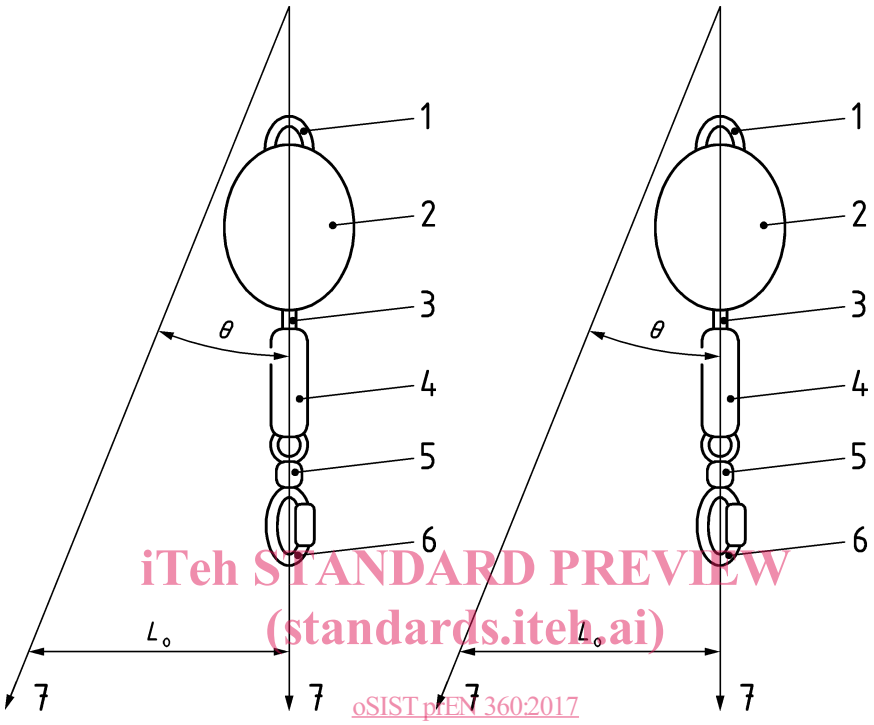

Key

1	attachment point	6	connector
2	housing	L	lateral offset
3	retractable lanyard	7	direction of use
4	energy dissipating element (if applicable)	θ	≤ 45° from vertical
5	swivel		

Figure 1 — Directions of use for a Type A retractable type fall arrester

3.3
retractable type fall arrester - Type B
retractable type fall arrester as described in 3.1, which can additionally be used horizontally. See Figure 2a and Figure 2b

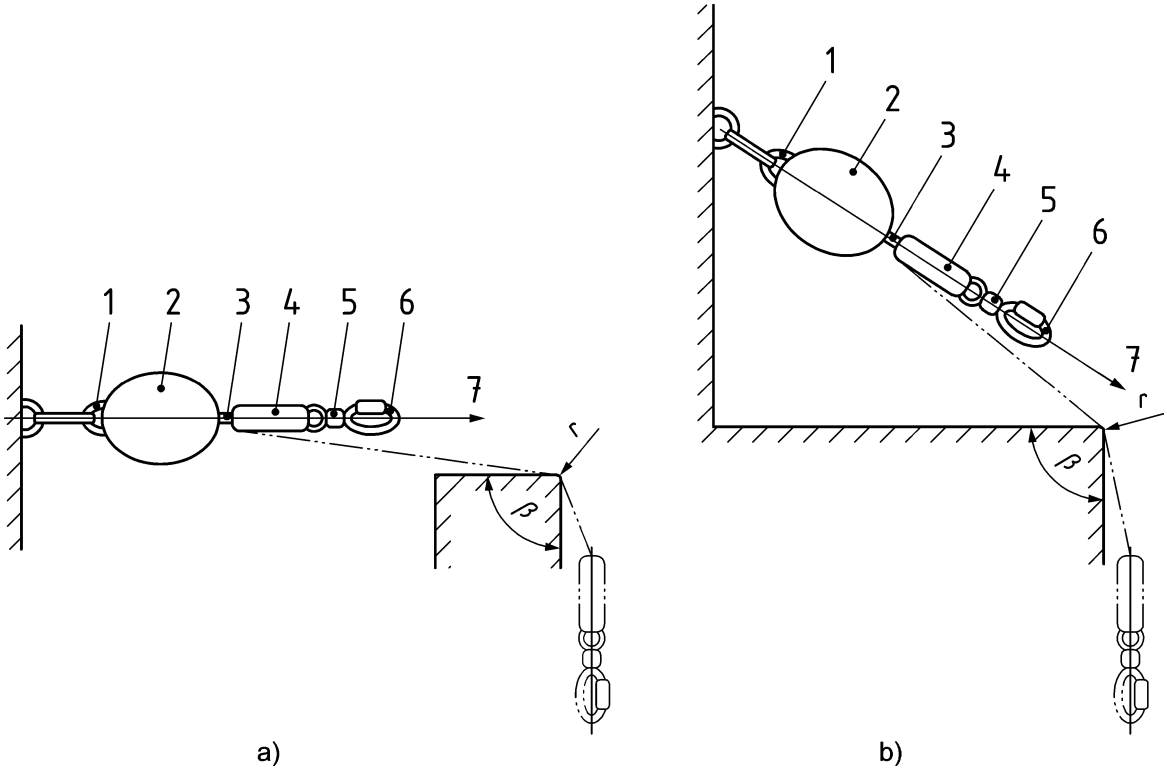

Key

1 attachment point
2 housing
3 retractable lanyard
4 energy dissipating element (if applicable)
5 swivel
6 connector
7 additional direction of use
r ≥ 0,5 mm edge radius
β ≥ 90° internal angle at edge

Figure 2 — Additional directions of use for a Type B retractable type fall arrester

3.4
retractable lanyard
connecting element of a retractable type fall arrester, which may be of wire rope, webbing or synthetic fibre rope and may include an energy dissipating element

Note 1 to entry A retractable lanyard may be any length.

3.5
energy dissipating element
element of a retractable type fall arrester, which is designed to dissipate the kinetic energy developed during a fall from a height

3.6
braking force
maximum force F_{max} in kilonewtons measured during the braking period of the dynamic performance test

3.7
arrest distance
vertical distance H_{AD} in metres measured from the initial position of the test mass before its release in a dynamic performance test to its final position after arrest

3.8
minimum rated load
minimum mass of the person, excluding any tools and equipment carried, for the retractable type fall arrester as specified by the manufacturer

3.9
maximum rated load
maximum mass of the person, including any tools and equipment carried, for the retractable type fall arrester as specified by the manufacturer

4 Requirements

4.1 Design and ergonomics

4.1.1 When checked in accordance with 5.1, the retractable type fall arrester shall include at least a permanent integrated swivelling element at the end of the lanyard to avoid twisting of the retractable lanyard.

4.1.2 When checked in accordance with 5.1, the section of the retractable lanyard (e.g. energy dissipating element, connector etc.) that is not retractable shall have a maximum length of 600 mm.

4.1.3 When checked in accordance with 5.1, the mass of the retractable type fall arrester intended to be transported by a single person shall not exceed 25 kg.

4.2 Materials and construction

4.2.1 Materials used in the retractable type fall arrester that may come into contact with the skin of the user including the retractable lanyard shall not be known to cause irritating or sensitization effects when used as intended.

4.2.2 The retractable lanyard shall be a wire rope, a webbing or a synthetic fibre rope.

4.2.3 Wire ropes for retractable lanyards shall be made either from stainless steel or galvanised steel conforming to EN 12385-4. Terminations (e.g. a swaged ferrule) for a retractable lanyard made from wire rope shall be made from a metallic material and not known to cause an adverse reaction with the material of the wire rope (e.g. dissimilar metal corrosion, cracking).

4.2.4 Fibre ropes, webbing and sewing threads for retractable lanyards shall be made from virgin filament or multifilament synthetic fibres suitable for their intended use. The breaking tenacity of the synthetic fibres shall be known to be at least 0,6 N/tex.

4.2.5 When checked in accordance with 5.1, exposed edges or corners of elements shall be relieved either with a radius of at least 0,5 mm or a chamfer of at least 0,5 mm x 45°.

4.2.6 The external end of the retractable lanyard shall be terminated such that it either incorporates a connector conforming to EN 362 or is of such a design that an EN 362 connector can be fitted to the termination, without the need for any modification to the termination.

4.2.7 If the retractable lanyard is not of the same construction (e.g. material type, size) over its entire length then the tests in 5.10 and 5.11 shall be repeated on each construction type used in the retractable lanyard.

4.2.8 The retractable type fall arrester shall be fitted with a fall indicator.

4.3 Retraction

When tested in accordance with 5.3 retraction tension for retractable type fall arresters shall not be less than 5 N or more than 110 N in the range of motion provided by the lanyard and the lanyard shall fully retract to its original position without stopping.

4.4 Static strength

4.4.1 Retractable type fall arresters with a retractable lanyard made from synthetic fibre rope or webbing shall sustain a load of at least 15 kN when tested as described in 5.4.

4.4.2 Retractable type fall arresters with a retractable lanyard made from wire rope shall sustain a load of at least 12 kN when tested as described in 5.4.

4.4.3 Non-retractable sections of lanyard (e.g. energy dissipating element) that are made from synthetic fibre rope or webbing shall sustain a load of at least 15 kN when tested as described in 5.4.

4.5 Dynamic performance for Type A and Type B

NOTE Table 1 provides an overview of dynamic performance requirements.

Table 1 — Overview of the dynamic performance requirements

Requirement	Type of retractable type fall arrestern	Condition(s)	Test mass	Requirements			
				Braking force F_{max} (kN)	Arrest distance H_{AD} (m)	Fall indicator activation	Clause no.
Dynamic performance in a vertical position	Type A and Type B	Ambient (as received)	100 kg	6	1,4	Yes	4.5.1
Dynamic performance in a vertical position	Type A and Type B	Heat, cold, wet & corrosion	Max. rated load	6	1,4	Yes	4.5.2
Dynamic performance in a vertical position	Type A and Type B	Ambient (as received)	Min. rated load	6	1,4	Yes	4.5.3
Dynamic performance at near-full extraction	Type A and Type B	Ambient (as received)	Max. rated load	6	1,4	Yes	4.5.4
Dynamic performance in a horizontal	Type B	Ambient (as	Max. rated	6	Not applicable	Yes	4.7

direction perpendicular to the edge		received)	load				
Dynamic performance in a horizontal direction laterally offset to the edge	Type B	Ambient (as received)	Max. rated load	6	Not applicable	Yes	4.7

4.5.1 When tested as described in 5.5 with a rigid steel mass of 100 kg, the braking force F_{max} shall not exceed 6 kN and the arrest distance H_{AD} shall not exceed 1,4 m.

4.5.2 When conditioned as described in 5.2 and tested as described in 5.6 with a rigid steel mass equal to the maximum rated load but not less than 100 kg, the braking force F_{max} shall not exceed 6 kN and the braking force H_{AD} shall not exceed 1,4 m.

4.5.3 When tested as described in 5.7 with the rigid steel mass equal to the minimum rated load, the braking force F_{max} shall not exceed 6 kN and the arrest distance H_{AD} shall not exceed 1,4 m.

4.5.4 When tested as described in 5.8 with the rigid steel mass equal to the maximum rated load but not less than 100 kg, the braking force F_{max} shall not exceed 6 kN and the arrest distance H_{AD} shall not exceed 1,4 m.

4.6 Dynamic strength and integrity

4.6.1 When tested as described in 5.9 with a rigid steel test mass equal to the maximum rated load but not less than 100 kg, the retractable type fall arrester shall arrest the test mass clear of the ground.

4.6.2 Retractable type fall arresters with a retractable lanyard made from synthetic fibre rope or webbing or in combination with wire rope shall sustain a load of three times the maximum rated load (static load) when tested in accordance with 5.9.

4.6.3 Retractable type fall arresters with a retractable lanyard made entirely from wire rope shall sustain a load of two times the maximum rated load (static load) when tested in accordance with 5.9.

4.7 Dynamic performance for Type B

4.7.1 When tested as described in 5.10 and 5.11 with a rigid steel mass equal to the maximum rated load and equal to the mass used in 5.6, the braking force F_{max} at the test mass shall not be greater than 6 kN and the retractable type fall arrester shall hold the test mass clear of the ground.

4.7.2 Retractable type fall arresters with a retractable lanyard made from synthetic fibre rope or webbing or in combination with wire rope shall sustain a load of three times the maximum rated load (static load) when tested in accordance with 5.10.3.6 and 5.11.3.6.

4.7.3 Retractable type fall arresters with a retractable lanyard made entirely from wire rope shall sustain a load of two times the maximum rated load (static load) when tested in accordance with 5.10.3.6 and 5.11.3.6.

4.8 Marking and information

Marking of the retractable type fall arrester shall be in accordance with Clause 6.

Information shall be supplied with the retractable type fall arrester in accordance with Clause 7.