SLOVENSKI STANDARD
SIST ETS 300 751 E1:2003

01-december-2003

Sistemi radiodifuzije – Sistem za podajanje informacij in zabave ter daljinsko distribucijo (SWIFT)

Radio broadcasting systems; System for Wireless Infotainment Forwarding and Teledistribution (SWIFT)

iTeh STANDARD PREVIEW
(standards.iteh.ai)

Ta slovenski standard je istoveten z: ETS 300 751 Edition 1

SIST ETS 300 751 E1:2003
https://standards.iteh.ai/catalog/standards/sist/387b215a-892c-4666-93b5-179f7323d2cf/sist-ets-300-751-e1-2003

ICS:

33.170	Televizijska in radijska difuzija	Television and radio broadcasting

SIST ETS 300 751 E1:2003 **en**

2003-01.Slovenski inštitut za standardizacijo. Razmnoževanje celote ali delov tega standarda ni dovoljeno.

SIST ETS 300 751 E1:2003

iTeh STANDARD PREVIEW
(standards.iteh.ai)

SIST ETS 300 751 E1:2003
https://standards.iteh.ai/catalog/standards/sist/387b2f5a-892c-4666-93b5-179f7323d2cf/sist-ets-300-751-e1-2003

SIST ETS 300 751 E1:2003

EUROPEAN TELECOMMUNICATION STANDARD

ETS 300 751

August 1997

Source: EBU/CENELEC/ETSI JTC

Reference: DE/JTC-SWIFT

ICS: 33.020

Key words: Broadcasting, radio, FM, Multimedia

European Broadcasting Union EBU UER Union Européenne de Radio-Télévision

iTeh STANDARD PREVIEW
(standards.iteh.ai)

Radio broadcasting systems; System for Wireless Infotainment Forwarding and Teledistribution (SWIFT)

SIST ETS 300 751 E1:2003
https://standards.iteh.ai/catalog/standards/sist/[illegible]-93b5-179f7323d2cf/sist-ets-300-751-e1-2003

ETSI

European Telecommunications Standards Institute

ETSI Secretariat

Postal address: F-06921 Sophia Antipolis CEDEX - FRANCE
Office address: 650 Route des Lucioles - Sophia Antipolis - Valbonne - FRANCE
X.400: c=fr, a=atlas, p=etsi, s=secretariat - **Internet:** secretariat@etsi.fr

Tel.: +33 4 92 94 42 00 - Fax: +33 4 93 65 47 16

Copyright Notification: No part may be reproduced except as authorized by written permission. The copyright and the foregoing restriction extend to reproduction in all media.

© European Telecommunications Standards Institute 1997.
© European Broadcasting Union 1997.
All rights reserved.

SIST ETS 300 751 E1:2003

iTeh STANDARD PREVIEW
(standards.iteh.ai)
SIST ETS 300 751 E1:2003
https://standards.iteh.ai/catalog/standards/sist/387b2f5a-892c-4666-93b5-179f7323d2cf/sist-ets-300-751-e1-2003

Whilst every care has been taken in the preparation and publication of this document, errors in content, typographical or otherwise, may occur. If you have comments concerning its accuracy, please write to "ETSI Editing and Committee Support Dept." at the address shown on the title page.

SIST ETS 300 751 E1:2003

Contents

Foreword 7

1 Scope 9

2 Normative references 9

3 Definitions and abbreviations 10
3.1 Definitions 10
3.2 Abbreviations 10

4 Multiplex requirements 11

5 Functions of the multiplexing unit 11

6 Reference model 12

7 Layers organization OSI reference model 13
7.1 Functional layers 13
7.1.1 Physical layer (Layer 1) 13
7.1.2 Data link layer (Layer 2) 13
7.1.3 Network layer (Layer 3) 13
7.1.4 Transport layer (Layer 4) 13
7.1.5 Session layer (Layer 5) 14
7.1.6 Presentation layer (Layer 6) 14
7.1.7 Application layer (Layer 7) 14
7.2 Services and protocols 14
7.3 Detailed description of Layers 1 to 5 15
7.3.1 Layer 1 15
7.3.1.1 Service provided by Layer 1 15
7.3.1.1.1 Service on the transmitter side 15
7.3.1.1.2 Modulation characteristics 15
7.3.1.1.3 Protection ratios 17
7.3.1.2 Service on the receiver side 17
7.3.2 Layer 2 17
7.3.2.1 Service provided by Layer 2 17
7.3.2.1.1 Service on the transmitter side 17
7.3.2.1.2 Service on the receiver side 18
7.3.2.2 Layer 2 protocol 19
7.3.2.2.1 Frame structure 19
7.3.2.3 Information Block 21
7.3.2.4 Parity Block 22
7.3.2.5 Block Identification Code (BIC) 22
7.3.2.6 Scrambling 22
7.3.3 Layer 3 (Network layer) 22
7.3.3.1 Service provided by Layer 3 22
7.3.3.1.1 Service on the transmitter side 22
7.3.3.1.2 Service on the receiver side 23

8 Multiplex organization (Layer 3 & 4) 24
8.1 Principles 24
8.2 Definition of logical channel 24
8.3 Service Channel "SeCh" (SI/LCh = 8 Hex) 24
8.3.1 Definition 24
8.3.2 Service Channel - Layer 3 25
8.3.2.1 L3-Header SeCh format. 25
8.3.3 Service message format 26

iTeh STANDARD PREVIEW
(standards.iteh.ai)
SIST ETS 300 751 E1:2003
https://standards.iteh.ai/catalog/standards/sist/387b2f5a-892c-4666-93b5-479f7323d2cf/sist-ets-300-751-e1-2003

SIST ETS 300 751 E1:2003

8.3.3.1 Channel Organization Table (COT) 27
8.3.3.2 Alternative Frequency Table (AFT) 28
8.3.3.3 Service Alternative Frequency Table (SAFT) 30
8.3.3.4 Time, Date, Position and Network name Table (TDPNT) ... 31
8.3.3.4.1 MJD, Modified-Julian-Date 31
8.3.3.4.2 Time reference 31
8.4 Short Message Channel "SMCh" (SI/LCh =9 Hex) 33
8.4.1 L4-Header SMCh format 33
8.4.2 L3-Header SMCh format 34
8.5 Long Message Channel "LMCh" (SI/LCh = A Hex) 35
8.5.1 L4-Header LMCh format 35
8.5.2 L3-Header LMCh format 36
8.6 Data Group Structure over long messages 36
8.6.1 L5-Data group header LMCh format 37
8.6.1.1 Fields description of the data group minimum header 38
8.6.1.2 Description of the DGCA field 38
8.6.1.3 Fields description of the session header 38
8.6.1.3.1 User Access field 39
8.6.2 Coding of the data group type 12 39

9 Conditional Access (CA) 40
9.1 Scrambling data 41
9.1.1 Introduction 41
9.1.2 Generating scrambling and descrambling sequences 41
9.1.2.1 Initialization Word (IW) 41
9.1.2.2 Phasing 42
9.1.3 Scrambling/descrambling processes 42
9.1.3.1 Conditional Access signalling configurations 42
9.1.3.2 Scrambling/Descrambling of the service in Data Groups ... 43
9.1.3.3 Scrambling/Descrambling of the service in the Long Message Channel 43
9.1.3.4 Scrambling/Descrambling of the service sent in SMCh 44
9.1.3.5 DAB compatibility 44
9.2 Signalling and synchronizing data 45
9.2.1 Conditional Access Identifier (CAId) 45
9.2.2 Service Conditional Access (SCA) 45
9.2.3 Data Group Conditional Access (DGCA) 47
9.2.4 Long Message Channel Conditional Access (LMCCA and LMCCA_Ext) 47
9.2.4.1 LMCCA 47
9.2.4.2 LMCCA_Extended 48
9.2.5 Short Message Channel Conditional Access (SMCCA and SMCCA_Ext) ... 49
9.2.5.1 SMCCA 49
9.2.5.2 SMCCA_Extended 50
9.3 ECM and EMM transmission 51
9.3.1 General description 51
9.3.1.1 ECM coding 51
9.3.1.2 EMM coding 52
9.3.1.3 Command Identifier (CI) coding 53
9.3.2 Transport 53
9.3.2.1 LMCh 53
9.3.2.2 SMCh 54
9.3.2.3 Together with service data 55

10 Error correction strategy 55
10.1 Layer 2 error detection and correction 55
10.2 Error detection strategy at other layers 56
10.2.1 L3 short message header CRC 56
10.2.2 L3 long message header CRC 56
10.2.3 L4 short message header CRC 56
10.2.4 L4 long message header CRC 57
10.2.5 L5 (data group) CRC 57

11 Bit-order of transmission 57

iTeh STANDARD PREVIEW
(standards.iteh.ai)
SIST ETS 300 751 E1:2003
https://standards.iteh.ai/catalog/standards/sist/387b2f5a-892c-4666-93b5-179f7323d2cf/sist-ets-300-751-e1-2003

SIST ETS 300 751 E1:2003

12 Service addressing mechanism 59
12.1 Global services 59
12.2 Country wide services 59
12.3 Network specific services 59
12.4 Local services of single transmitters 60
12.5 Address allocation for global services 60

13 Quality of service 60
13.1 Useful bit-rate 60
13.2 Expected capabilities of a Conditional Access system 60
13.2.1 From the user's point of view 60
13.2.1.1 Access time of a newly connected user 60
13.2.1.2 Zapping time 60
13.2.2 From the service operator's point of view 60
13.2.2.1 Bit rate needed to broadcast Conditional Access messages 60
13.2.2.1.1 Bit rate for the ECMs 61
13.2.2.1.2 Bit rate for the EMMs 61
13.2.2.2 Maximum time for changing the access mode 61
13.2.2.3 Transcontrol 62
13.2.2.4 Length of a scrambling cycle 62
13.2.2.5 Repetition frequency 62
13.2.2.6 Hierarchical coding and scrambling 62

14 Classes of services 62

History 64

iTeh STANDARD PREVIEW
(standards.iteh.ai)
SIST ETS 300 751 E1:2003
https://standards.iteh.ai/catalog/standards/sist/387b2f5a-892c-4666-93b5-179f7323d2cf/sist-ets-300-751-e1-2003

SIST ETS 300 751 E1:2003

Blank page

iTeh STANDARD PREVIEW
(standards.iteh.ai)
SIST ETS 300 751 E1:2003
https://standards.iteh.ai/catalog/standards/sist/387b2f5a-892c-4666-93b5-179f7323d2cf/sist-ets-300-751-e1-2003

SIST ETS 300 751 E1:2003

Foreword

This European Telecommunication Standard (ETS) has been produced by the Joint Technical Committee (JTC) of the European Broadcasting Union (EBU), Comité Européen de Normalisation ELECtrotechnique (CENELEC) and the European Telecommunications Standards Institute (ETSI).

NOTE: The EBU/ETSI JTC was established in 1990 to co-ordinate the drafting of standards in the specific field of broadcasting and related fields. Since 1995 the JTC became a tripartite body by including in the Memorandum of Understanding also CENELEC, which is responsible for the standardization of radio and television receivers. The EBU is a professional association of broadcasting organizations whose work includes the co-ordination of its members' activities in the technical, legal, programme-making and programme-exchange domains. The EBU has active members in about 60 countries in the European broadcasting area; its headquarters is in Geneva *.

* European Broadcasting Union
Case Postale 67
CH-1218 GRAND SACONNEX (Geneva)
Switzerland

Tel: +41 22 717 21 11
Fax: +41 22 717 24 81

Transposition dates	
Date of adoption:	8 August 1997
Date of latest announcement of this ETS (doa):	30 November 1997
Date of latest publication of new National Standard or endorsement of this ETS (dop/e):	31 May 1998
Date of withdrawal of any conflicting National Standard (dow):	31 May 1998

iTeh STANDARD PREVIEW
(standards.iteh.ai)
SIST ETS 300 751 E1:2003
https://standards.iteh.ai/catalog/standards/sist/387b2f5a-892c-4666-93b5-179f7323d2cf/sist-ets-300-751-e1-2003

SIST ETS 300 751 E1:2003

Blank page

iTeh STANDARD PREVIEW
(standards.iteh.ai)
SIST ETS 300 751 E1:2003
https://standards.iteh.ai/catalog/standards/sist/387b2f5a-892c-4666-93b5-179f7323d2cf/sist-ets-300-751-e1-2003

SIST ETS 300 751 E1:2003

1 Scope

This European Telecommunication Standard (ETS) establishes a broadcasting standard of a System for Wireless Infotainment Forwarding and Teledistribution (SWIFT) designed for delivery of data services for mobile, portable and fixed receivers in the FM band. This ETS defines the nature and content of the transmitted SWIFT signal. It describes also the organization of the multiplex for the SWIFT standard.

A multiplex is necessary to optimize the use of the radio channel by sharing it between several applications. For example, a dGPS application has some precise constraints such as real time (one message per second), size (2 kbits per message). This application requires a continuous channel of perhaps 3 kbit/s. Assuming a DARC channel has a minimum useful bit rate of 6 kbit/s, it would be interesting to use the remaining 3 kbit/s for an other application, newspapers broadcasting for example.

On the opposite, in a newspaper application, it is necessary to broadcast the news twice a day for example in a maximum time (1 hour). This is a low rate service with a big amount of data and without real time. It would be interesting to stop for some time this service if hot news have to be sent (higher service priority).

Sometimes, the network operator can offer the same application (class of application/service) to different service providers, for example, different newspapers. It would be interesting to multiplex this newspapers on the same radio channel in a transparent manner for the service provider point of view.

The multiplex can be made:

- in the Transmitter Station Equipment (TSE), for splitting the radio channel into logical channels using a given mapping at a given time. The characteristic of the logical channels is a constant bit rate enabling real time applications and/or applications requiring constant bit rate all the time;
- in the TSE, for repeating regularly or inserting some information into the multiplex. In this case, a local priority management is required;
- on the network server, based on a priority mechanism. This enables for example the mixing of several applications with different priorities, but not real time and on demand (news and hot news, pictures preloading and weather information);
- on the network server, for multiplexing different processes of an application (for example, different newspapers for the application newspapers broadcasting). This is useful if it should offer a quicker "average" service (for example, the reading of a newspaper page by page before the complete loading).

iTeh STANDARD PREVIEW
(standards.iteh.ai)
SIST ETS 300 751 E1:2003
https://standards.iteh.ai/catalog/standards/sist/387b2f5a-892c-4666-93b5-179f7323d2cf/sist-ets-300-751-e1-2003

As described above, there are different multiplexing levels/functions for different reasons. Each function is necessary and it shall be possible to make them running together.

2 Normative references

This ETS incorporates by dated and undated reference, provisions from other publications. These normative references are cited at the appropriate places in the text and the publications are listed hereafter. For dated references, subsequent amendments to or revisions of any of these publications apply to this ETS only when incorporated in it by amendment or revision. For undated references the latest edition of the publication referred to applies.

[1] EN 50067: "Specification of the Radio Data System (RDS)".

[2] ETS 300 075: "Terminal Equipment (TE); Processable data File transfer".

[3] ETS 300 174: "Network Aspects (NA); Digital coding of component television signals for contribution quality applications in the range 34 - 45 Mbit/s".

[4] ETS 300 401: "Radio broadcasting systems; Digital Audio Broadcasting (DAB) to mobile, portable and fixed receivers".

SIST ETS 300 751 E1:2003

[5] ISO 7498: "Information Processing Systems - Open systems Interconnection - Basic Reference Model".

[6] ITU-T Recommendation X.200: "Reference model of open systems interconnection for CCITT applications".

[7] ITU-R Recommendation BS 1194: "Data Radio Channel (DARC)".

[8] ITU-R Recommendation 412: "Planning standard for FM broadcasting".

3 Definitions and abbreviations

3.1 Definitions

For the purpose of this ETS, the following definitions apply:

Several carriers may be associated to one transmitter. Every carrier transports only one physical DARC channel.

This physical channel will be identified by the frequency of its carrier. It is time-divided in **Layer 2 data units (frames or blocks)** continuously broadcast with the same number of Bytes in it.

One physical channel is shared between several logical channels. Three logical channels with different broadcasting characteristics are described in this ETS:

a) the service channel SeCh, especially dedicated to information about the local transmitter and multiplex organization;

b) the short message channel SMCh, for low bit-rate or real time applications;

c) the long message channel LMCh, for files with low priority.

iTeh STANDARD PREVIEW
(standards.iteh.ai)
SIST ETS 300 751 E1:2003
https://standards.iteh.ai/catalog/standards/sist/387b2f5a-892c-4666-93b5-179f7323d2cf/sist-ets-300-751-e1-2003

Each logical channel carries a lot of **subchannels** distinguishable by an address and/or a type. Each subchannel corresponds to one **service**.

Services with some common broadcasting characteristics are classified in a same category, or **class of services**.

3.2 Abbreviations

For the purposes of this ETS, the following abbreviations apply in the construction of system coefficient names:

ACS	Access Control System
ADD	ADDress
BIC	Block Identification Code
BPF	Band-Pass Filter
CA	Conditional Access
CAId	Conditional Access Identifier
CW	Control Word
DAB	Digital Audio Broadcasting
DARC	DAta Radio Channel
DGCA	Data Group Conditional Access
dGPS	differential Global Positioning System
ECM	Entitlement Checking Message
EMM	Entitlement Management Message
FIG	Fast Information Groups (see ETS 300 401 [4])
FM	Frequency Modulation
GPS	Global Positioning System
IM	Initialization Modifier
LMCCA	Long Message Channel Conditional Access

SIST ETS 300 751 E1:2003

LMCh	Long Message Channel
LMSK	Level-controlled Minimum Shift Keying
LPF	Low-Pass Filter
MM	Messaging Mode
MSK	Minimum Shift Keying
NWS	Network Server
OSI	Open Systems Interconnection
PRBS	Pseudo-Random Binary Sequence
RFA	Reserved for Future Addition
SCA	Service Conditional Access
SMCCA	Short Message Channel Conditional Access
SMCh	Short Message Channel
SPS	Service Provider Server
SWIFT	System for Wireless Infotainment Forwarding and Teledistribution
TSE	Transmitter Station Equipment

4 Multiplex requirements

The multiplex system shall cope with specific requirements. A list of these requirements is given below:

- flexible usage of a given subchannel according to the requirements of each individual service;
- an optimum management of the transmission resource by dynamic reallocation of the subchannels;
- to recover any service clock at the receiver side;
- to ensure that the impact of the demultiplexing method on the decoder price is low;
- to take into account the needs of the Conditional Access system which operates on a service basis;
- to take into account class of services based upon common broadcasting characteristics at the multiplex level;
- to inform receivers on the broadcast services and carriers configuration by offering all the information required to easily select a service and change carrier especially when mobile and of course, without return channel;
- to keep under a defined value the access time to a selected service;
- to keep under a defined value the change time from one service to another, on the same or on a different carrier;
- to take into account possible power/battery saving for some services;
- to take into account possible fast access for some services;
- to take into account possible interworking with DAB services.

iTeh STANDARD PREVIEW
(standards.iteh.ai)
SIST ETS 300 751 E1:2003
https://standards.iteh.ai/catalog/standards/sist/387b2f5a-892c-4666-93b5-1f673250dc1a/ets-300-751-e1-2003

5 Functions of the multiplexing unit

The multiplexing (demultiplexing) unit is located between the source coding (decoding) and the modulator (demodulator). The functions of the following list take place between these two functions and define what is intended by a multiplexing unit:

1) **source coding/decoding:** out of mux scope, on top of mux functions;

2) **end to end scrambling and access control management:** this scrambling function may apply all over the transmission chain;

3) **service multiplexing information insertion/extraction:** each service is described when needed (type of data, coding algorithm, type of segmentation and reassembling technique, type of error

SIST ETS 300 751 E1:2003

correction/detection, etc.). Information relative to the end to end scrambling or the time base of the service may also be inserted/extracted;

4) **error correction/detection:** optional, a service may require an improved quality (additional error correction) or error detection may be required by the above functions (source coding);

5) **segmentation and reassembling:** the bit stream of each service has to be segmented in order to allow a time division multiplex;

6) **multiplex technique:** several multiplexing techniques are available (position multiplex, fixed or variable length packets with headers, etc.). The most appropriate one may be chosen for each layer. It should however allow a time division multiplex;

7) **transmission media scrambling and access control management:** identical to function 2) but only performed on one transmission link at the transport level, between the mux and demux functions;

8) **channel multiplexing information:** at this level is inserted/extracted tables containing mapping between physical channels information and the logical organization of the services;

9) **frame generation/delineation:** for a frame based transmission, it is the capability to recover the boundaries;

10) **express data transfer:** It is the capability to reserve a subchannel with a high priority access to the data contained in it;

11) **channel coding/decoding and modulation/demodulation:** this is out of the mux unit scope. This function may include error correction facilities in order to ensure the correct transmission quality.

iTeh STANDARD PREVIEW

The multiplexing/demultiplexing unit is expected to ensure functions 2) to 10).

(standards.iteh.ai)

6 Reference model

SIST ETS 300 751 E1:2003
https://standards.iteh.ai/catalog/standards/sist/387b2f5a-892c-4666-93b5-f2f7323d2cf/sist-ets-300-751-e1-2003

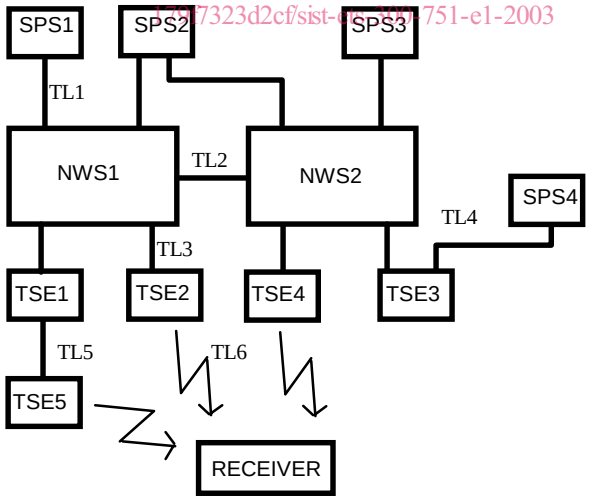

Transmission Link TL1 is between a service provider server and a network server.

Transmission Link TL2 is between two (different) network servers.

Transmission Link TL3 is between network servers and transmission station equipment TSE.

Transmission Link TL4 is between a service provider server and a TSE.

Transmission Link TL5 is between two TSE.

Transmission Link TL6 is between TSE and receivers.

Figure 1: Reference model

SIST ETS 300 751 E1:2003

Service organization hypothesis:

- a service provider server can be connected to several network servers;
- two different networks can be connected via their network servers. These networks are not necessarily SWIFT networks;
- a TSE belongs to only one network;
- one TSE can be connected to several other TSE.

Consequences:

- TL1 and TL2 should be independent of the network organization and transmission mechanisms;
- TL3 and TL4 should permit service multiplexing and insertion at transport level;
- TL5 should permit service multiplexing and insertion at network level.

7 Layers organization OSI reference model

Open Systems Interconnection reference model (OSI reference model) is a means of structuring communication between entities, which may be located at different sites. The OSI reference model is committed to ISO 7498 [5] and ITU-T Recommendation X.200 [6].

7.1 Functional layers

As a main principle of structuring, the model subdivides functionality into 7 functional layers.

Layers 1 to 4 include functions needed for transferring data between computers (transport functions), and Layers 5 to 7 include functions needed to facilitate common transactions between different users at different sites (application functions).

iTeh STANDARD PREVIEW

For Layers 1 to 4, functions support the transfer of data, independently of what happens with these data after their transfer.

(standards.iteh.ai)

For Layers 5 to 7, functions should deal with establishment and release of a common understanding between users, which act as the source and sink of the data.

SIST ETS 300 751 E1:2003
https://standards.iteh.ai/catalog/standards/sist/387b2f5a-892c-4666-93b5-179f7323d2cf/sist-ets-300-751-e1-2003

Application functions and transmission functions should be independent of each other, as far as possible.

7.1.1 Physical layer (Layer 1)

OSI systems are connected by a physical medium, consist of copper conductor, optical fibres, radio waves, or any other medium. The physical layer does not contain the physical medium, but ensures the transmission of data bits (synchronous or asynchronous). Of course, these functions are highly media-dependent.

7.1.2 Data link layer (Layer 2)

The data link layer adds error recovery and flow control functions to the physical layer. Especially, it processes errors non-corrected by Layer 1. The Layer 2 protocol generally organizes the data into frames.

7.1.3 Network layer (Layer 3)

The network layer serves to establish, maintain, and clear network connections or to provide connectionless transmission of data units between OSI systems. This layer implies functions such as rooting and relaying. Routeing deals with establishing a route between two systems and relaying with the use of intermediate systems data transfer from one data link (or more generally speaking, sub-network) to another data link (belonging to a sub-network which is possibly dissimilar). The functions of this layer are highly dependent on the technology of those communication (sub-) networks.

7.1.4 Transport layer (Layer 4)

The transport layer serves to establish, maintain, and clear transport connections or to provide connectionless transmission of data units between applications (end-users). It is in charge of the segmentation of the Layer 5 data into packets. Depending on the class of service, the transport layer