SLOVENSKI STANDARD
SIST EN 60095-4:1997

01-februar-1997

Svinļ eno-kislinske zagonske baterije - 4. del: Mere baterij za teǵka komercialna vozila (IEC 60095-4:1989, prilagojen) (IEC 60095-4:1989)

Lead-acid starter batteries - Part 4: Dimensions of batteries for heavy commercial vehicles (IEC 60095-4:1989)

Blei-Starterbatterien - Teil 4: Maße von Nutzkraftwagen-Batterien (IEC 60095-4:1989)

iTeh STANDARD PREVIEW
(standards.iteh.ai)

Batteries d'accumulateurs de démarrage au plomb - Partie 4: Dimensions des batteries pour poids lourds

SIST EN 60095-4:1997
https://standards.iteh.ai/catalog/standards/sist/59ca7ad9-038c-474d-8a1a-c6b1992bea24/sist-en-60095-4-1997

Ta slovenski standard je istoveten z: EN 60095-4:1993

ICS:

29.220.20	Kislinski sekundarni ļ leni in baterije	Acid secondary cells and batteries

SIST EN 60095-4:1997 **en**

2003-01.Slovenski inštitut za standardizacijo. Razmnoževanje celote ali delov tega standarda ni dovoljeno.

iTeh STANDARD PREVIEW
(standards.iteh.ai)

SIST EN 60095-4:1997
https://standards.iteh.ai/catalog/standards/sist/59ca7ad9-038c-474d-8a1a-c6b1992bea24/sist-en-60095-4-1997

EUROPEAN STANDARD

NORME EUROPÉENNE

EUROPÄISCHE NORM

EN 60095-4

January 1993

UDC 621.355.2

Descriptors: Starter batteries, lead-acid batteries, commercial road vehicules, electric terminals, dimensions, marking

English version

Lead-acid starter batteries
Part 4: Dimensions of batteries for heavy commercial vehicles
(IEC 95-4:1989, modified)

Batteries d'accumulateurs de démarrage au plomb
Quatrième partie: Dimensions des batteries pour poids lourds
(CEI 95-4:1989, modifiée)

Blei-Starterbatterien
Teil 4: Maße von Lkw-Batterien
(IEC 95-4:1989, modifiziert)

This European Standard was approved by CENELEC on 23 September 1991. CENELEC members are bound to comply with the CEN/CENELEC Internal Regulations which stipulate the conditions for giving this European Standard the status of a national standard without any alteration.

Up-to-date lists and bibliographical references concerning such national standards may be obtained on application to the Central Secretariat or to any CENELEC member.

This European Standard exists in three official versions (English, French, German). A version in any other language made by translation under the responsibility of a CENELEC member into its own language and notified to the Central Secretariat has the same status as the official versions.

CENELEC members are the national electrotechnical committees of Austria, Belgium, Denmark, Finland, France, Germany, Greece, Iceland, Ireland, Italy, Luxembourg, Netherlands, Norway, Portugal, Spain, Sweden, Switzerland and United Kingdom.

iTeh STANDARD PREVIEW
(standards.iteh.ai)

SIST EN 60095-4:1997
https://standards.iteh.ai/catalog/standards/sist/59ca7ad9-0b8c-47cd-8a9a-c6b1992bea24/sist-en-60095-4-1997

CENELEC

European Committee for Electrotechnical Standardization
Comité Européen de Normalisation Electrotechnique
Europäisches Komitee für Elektrotechnische Normung

Central Secretariat: rue de Stassart 35, B - 1050 Brussels

© 1993 Copyright reserved to CENELEC members

Ref. No. EN 60095-4:1993 E

1993-06-16

Contents

iTeh STANDARD PREVIEW
(standards.iteh.ai)

SIST EN 60095-4:1997
https://standards.iteh.ai/catalog/standards/sist/59ca7ad9-038c-474d-8a1a-c6b1992bea24/sist-en-60095-4-1997

Foreword

The CENELEC questionnaire procedure, performed for finding out whether or not the International Standard IEC 95-4:1989 could be accepted without textual changes, has shown that some common modifications were necessary for the acceptance as European Standard.

The reference document, together with the common modifications prepared by the CENELEC BTTF 62-1 was submitted to the CENELEC members for formal vote.

The text of the draft was ratified by CENELEC as EN 60095-4 on 23 September 1991 and was editorially revised by CENELEC/TC 21X before circulation to the National Committees.

The common modifications are indicated by a vertical line in the left margin of the text.

The following dates are applicable:

- latest date of publication of an identical national standard	(dop)	1993-06-01
- date of withdrawal of conflicting national standards	(dow)	1993-06-01

iTeh STANDARD PREVIEW
(standards.iteh.ai)

SIST EN 60095-4:1997
https://standards.iteh.ai/catalog/standards/sist/59ca7ad9-038c-474d-8a1a-c6b1992bea24/sist-en-60095-4-1997

Lead-acid starter batteries
Part 4: Dimensions of batteries for heavy commercial vehicles

SECTION ONE — GENERAL

1 Scope

This standard is applicable to lead-acid batteries used for starting, lighting and ignition of agriculture machines, buses, coaches and lorries.

2 Object

The object of the present standard is to specify the main dimensions of starter batteries of thirteen types.

SECTION TWO — MAIN DIMENSIONS OF BATTERIES

3 Standard series

The standard series comprises types D1, D2, D2a, D3, D3a, D4, D4a, D5, D5a, D6, D7, D8 and D9.

4 Main dimensions of batteries

The dimensions corresponding to the starter batteries shall be in accordance with table I.

5 Fastening

Types D2, D3, D4, D5, D6 and D7 are intended for fastening by the upper part of the battery only. This fastening shall be effected at a level defined by dimension h_1. The configuration shall permit the fitting of an angle-iron frame both legs of which are 20 mm wide for the major part of its length and width.

iTeh STANDARD PREVIEW
(standards.iteh.ai)

However, types D1, D2a, D3a, D4a, D5a, D8 and D9 may be fastened by the base of the battery container, or by the upper part of the battery container.

Fastening by the base of the container on the long sides is effected by fixing ledges over the full length and providing notches to prevent movement of the battery lengthwise, as shown .

SIST EN 60095-4:1997
https://standards.iteh.ai/catalog/standards/sist/59ca7ad9-038c-474d-8a1a-
[illegible]

Fastening by the base of the container on the short sides is effected by fixing lugs with notches to prevent movement of the battery crosswise.

The arrangement of the ledges, lugs and notches shall be as shown in the figures.

Table 1: Dimensions of lead-acid starter batteries for heavy commercial vechicles

Type	l	l_1	l_2	b	b_1	b_2	h	h_1	c	$l + 2c$
D1	386^{+0}_{-5}	377^{+0}_{-5}	390^{+0}_{-5}	175^{+0}_{-4}	175^{+0}_{-4}		205^{+0}_{-4}	184^{+0}_{-4}	10 max	406 max
D2	349^{+0}_{-5}	344^{+0}_{-8}		175^{+0}_{-4}	162^{+0}_{-4}		235^{+0}_{-4}	213^{+0}_{-4}		
D2a	349^{+0}_{-5}	344^{+0}_{-8}		175^{+0}_{-4}	162^{+0}_{-4}	175^{+0}_{-4}	235^{+0}_{-4}	213^{+0}_{-4}		
D3	349^{+0}_{-5}	344^{+0}_{-8}		175^{+0}_{-4}	162^{+0}_{-4}		285^{+0}_{-10}	263^{+0}_{-4}		
D3a	349^{+0}_{-5}	344^{+0}_{-8}		175^{+0}_{-4}	162^{+0}_{-4}	175^{+0}_{-4}	285^{+0}_{-10}	263^{+0}_{-4}		
D4	513^{+0}_{-5}	475^{+0}_{-5}		189^{+0}_{-4}	178^{+0}_{-4}		223^{+0}_{-8}	195^{+0}_{-4}		515 max
D4a	513^{+0}_{-5}	475^{+0}_{-5}	489^{+0}_{-5}	189^{+0}_{-4}		175^{+0}_{-4}	223^{+0}_{-8}	195^{+0}_{-4}		
D5	513^{+0}_{-5}	475^{+0}_{-5}		223^{+0}_{-4}	210^{+0}_{-4}		223^{+0}_{-8}	195^{+0}_{-4}		515 max
D5a	513^{+0}_{-5}	475^{+0}_{-5}	489^{+0}_{-5}	223^{+0}_{-4}		218^{+0}_{-4}	223^{+0}_{-8}	195^{+0}_{-4}		
D6	518^{+0}_{-5}	475^{+0}_{-5}		291^{+0}_{-4}	265^{+0}_{-4}		242^{+0}_{-8}	216^{+0}_{-4}		520 max
D7	286^{+0}_{-6}	254^{+2}_{-7}	256^{+0}_{-6}	270^{+0}_{-5}	267^{+2}_{-6}		230^{+0}_{-5}	208^{+0}_{-4}		286 max
D8	510^{+0}_{-6}	476^{+0}_{-5}	489^{+0}_{-5}	175^{+0}_{-4}		175^{+0}_{-4}	235^{+0}_{-5}	210^{+0}_{-5}		515 max
D9	510^{+0}_{-6}	476^{+0}_{-5}	489^{+0}_{-5}	218^{+0}_{-5}		218^{+0}_{-5}	235^{+0}_{-5}	210^{+0}_{-5}		515 max

NOTE: As an alternative to the base hold-down features shown for types D2a and D3a, external buttressing of the container is permitted.

iTeh STANDARD PREVIEW
(standards.iteh.ai)
SIST EN 60095-4:1997
https://standards.iteh.ai/catalog/standards/sist/55ea7dd03c-57a7-48a1-c6b1-992bea24/sist-en-60095-4-1997

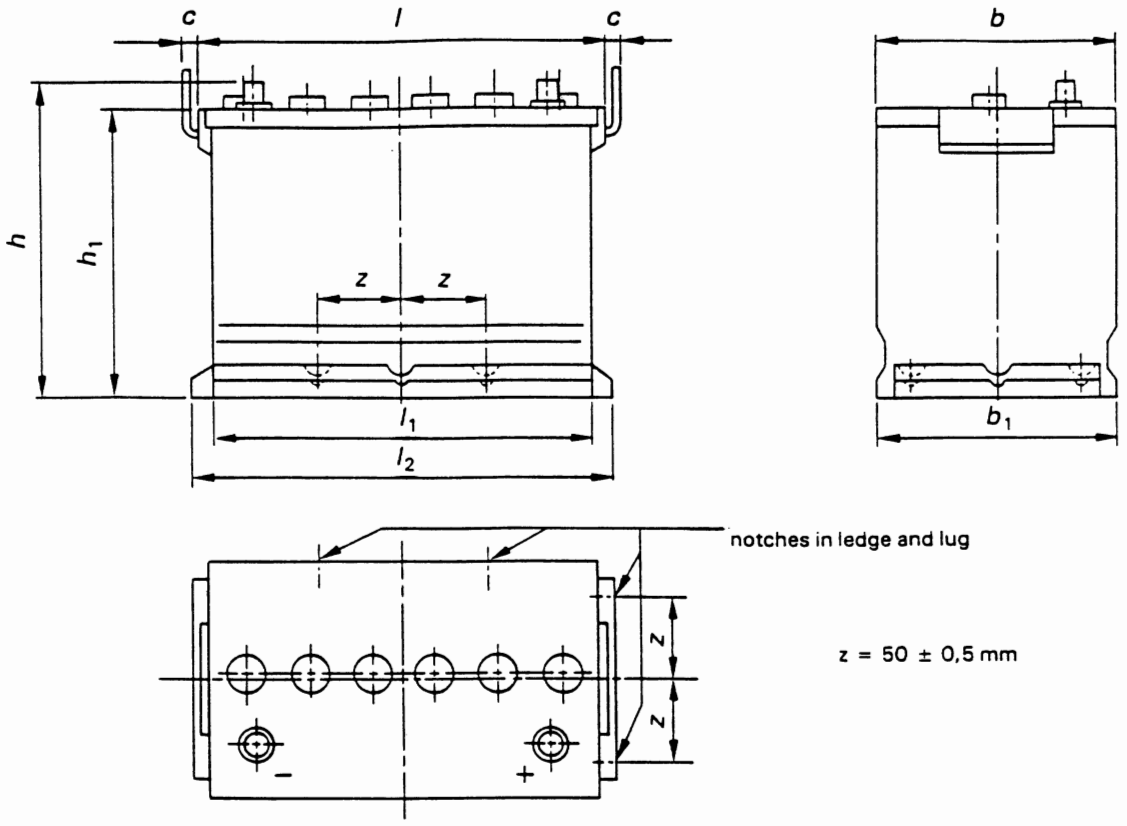

Fig. 1. - Type D1.

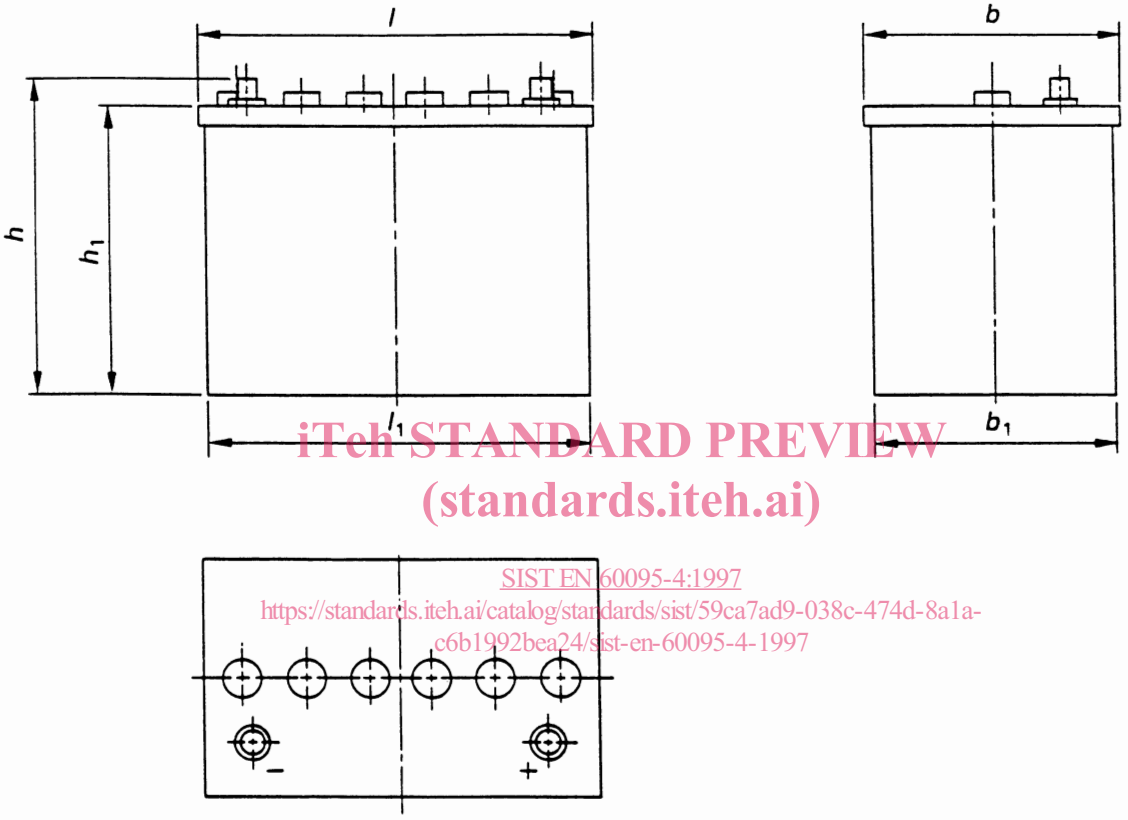

iTeh STANDARD PREVIEW
(standards.iteh.ai)
SIST EN 60095-4:1997
https://standards.iteh.ai/catalog/standards/sist/59ca7ad9-038c-474d-8a1a-c6b1992bea24/sist-en-60095-4-1997

Fig. 2. - Types D2, D3.

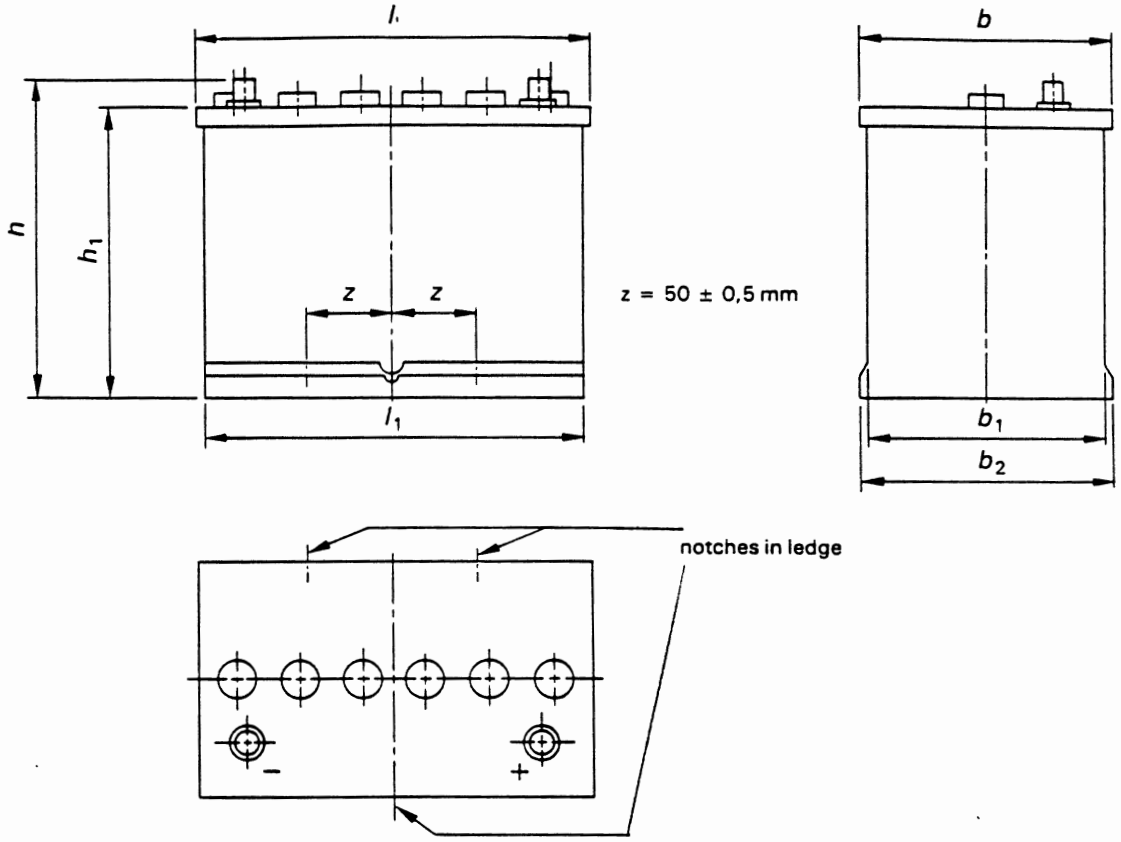

Fig. 3. - Types D2a, D3a.

iTeh STANDARD PREVIEW
(standards.iteh.ai)

SIST EN 60095-4:1997
https://standards.iteh.ai/catalog/standards/sist/59ca7ad9-038c-474d-8a1a-c6b1992bea24/sist-en-60095-4-1997