INTERNATIONAL STANDARD

ISO 16031-1

First edition
2002-06-15

Aerospace fluid systems — O-rings, inch series: Inside diameters and cross sections, tolerances and size-identification codes —

Part 1: Close tolerances for hydraulic systems

Systèmes aérospatiaux de fluides — Joints toriques, série en inches: diamètres intérieurs et sections, tolérances et codes d'identification dimensionnelle

Partie 1: Tolérances serrées pour systèmes hydrauliques

Reference number
ISO 16031-1:2002(E)

ISO copyright office
Case postale 56 • CH-1211 Geneva 20
Tel. + 41 22 749 01 11
Fax + 41 22 749 09 47
E-mail copyright@iso.ch
Web www.iso.ch

Printed in Switzerland

Foreword

ISO (the International Organization for Standardization) is a worldwide federation of national standards bodies (ISO member bodies). The work of preparing International Standards is normally carried out through ISO technical committees. Each member body interested in a subject for which a technical committee has been established has the right to be represented on that committee. International organizations, governmental and non-governmental, in liaison with ISO, also take part in the work. ISO collaborates closely with the International Electrotechnical Commission (IEC) on all matters of electrotechnical standardization.

International Standards are drafted in accordance with the rules given in the ISO/IEC Directives, Part 3.

The main task of technical committees is to prepare International Standards. Draft International Standards adopted by the technical committees are circulated to the member bodies for voting. Publication as an International Standard requires approval by at least 75 % of the member bodies casting a vote.

Attention is drawn to the possibility that some of the elements of this part of ISO 16031 may be the subject of patent rights. ISO shall not be held responsible for identifying any or all such patent rights.

ISO 16031-1 was prepared by Technical Committee ISO/TC 20, *Aircraft and space vehicles*, Subcommittee SC 10, *Aerospace fluid systems and components*.

ISO 16031 consists of the following parts, under the general title *Aerospace fluid systems — O-rings, inch series: Inside diameters and cross sections, tolerances and size-identification codes*:

— *Part 1: Close tolerances for hydraulic systems*

— *Part 2: Standard tolerances (for non-hydraulic systems)*

Introduction

In fluid power systems, power is transmitted through a fluid (liquid or gas) under pressure within an enclosed circuit. Components are designed to meet these requirements under varying conditions. Testing of components to meet performance requirements provides users with a basis of assurance for determining design applications and for checking component compliance with their stated requirements.

Aerospace fluid systems — O-rings, inch series: Inside diameters and cross sections, tolerances and size-identification codes —

Part 1:
Close tolerances for hydraulic systems

1 Scope

This part of ISO 16031 specifies the inside diameters, cross-sections, tolerances and size identification codes for inch O-rings used in aerospace fluid systems.

The dimensions and high precision tolerances specified in this part of ISO 16031 are suitable for nitrile and ethylene propylene materials intended for use in high pressure hydraulic fluid systems provided that suitable tooling be available.

2 Normative reference

The following normative document contains provisions which, through reference in this text, constitute provisions of this part of ISO 16031. For dated references, subsequent amendments to, or revisions of, any of these publications do not apply. However parties to agreements based on this part of ISO 16031 are encouraged to investigate the possibility of applying the most recent edition of the normative document indicated below. For undated references, the latest edition of the document referred to applies. Members of ISO and IEC maintain registers of currently valid International Standards.

ISO 5598:1985, *Fluid power systems and components — Vocabulary*

3 Terms and definitions

For the purposes of this part of ISO 16031 the terms and definitions given in ISO 5598 apply.

NOTE Throughout ISO 16301, the term “O-ring” has been adopted although the correct technical term is “toroidal sealing ring”.

4 Configuration

The shape of the O-ring shall be toroidal as shown in Figure 1.

5 Inside diameters, cross-sections and tolerances

The combinations of inside diameters, d_1, cross-sections, d_2, and O-ring tolerances shall be chosen from Tables 1 and 2. For each of these combinations there is a corresponding size identification code.

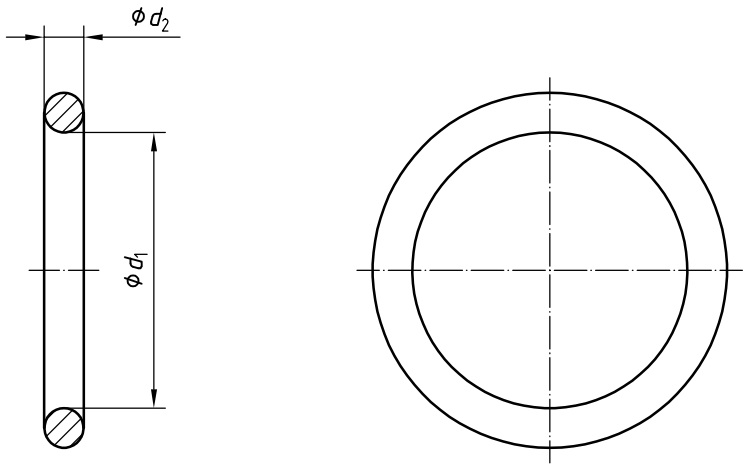

Figure 1 — Typical O-ring configuration

6 Size identification code

6.1 Table 1 lists the dimensions of O-rings and their corresponding size identification code from -001 to -475. The size identification codes are divided into groups of one hundred and within each group are sequential and not significant. Each group of one hundred identifies the cross-section size of the O-rings within the group (except for sizes -001 to -003 which have unique cross-section sizes).

EXAMPLE

- 0 2 5 O-ring size identification code

Reference number allocated to an O-ring internal diameter size

Signifies that the O-ring has a cross-section of 0,070 in (1,78 mm)

Reference to Table 1 establishes that -025 represents an O-ring with a cross-section of 0,070 in (1,78 mm) and an internal diameter of 1,170 in to 1,182 in (29,72 mm to 30,02 mm).

6.2 Table 2, lists the dimensions of O-rings and their corresponding size identification code for the 900 series, which includes all of the currently standardized O-rings for sealing straight thread tube fitting bosses. This series utilizes a significant dash numbering system, where the dash number designates the tube size in 1/16ths in, with the exception of the -901, which is intended for a 0,093 8 in (2,38 mm) nominal outside diameter tube.

EXAMPLE

- 9 1 8 O-ring size identification code

Signifies that the O-ring is for an 18/16ths, i.e. 1,125 in (28,58 mm) tube size

Signifies that the O-ring is for a straight thread tube fitting boss

Table 1 — Inside diameters, cross-sections and tolerances

Size identification code	Internal diameter d_1				Cross section d_2				Volume (Ref.)	
	in		mm		in		mm			
	min.	max.	min.	max.	min.	max.	min.	max.	in^3	cm^3
-001	0,025	0,033	0,64	0,84	0,037	0,043	0,94	1,09	0,000 3	0,005
-002	0,038	0,046	0,97	1,17	0,047	0,053	1,19	1,35	0,000 6	0,010
-003	0,052	0,060	1,32	1,52	0,057	0,063	1,45	1,60	0,001 0	0,016
-004	0,065	0,075	1,65	1,90	0,067	0,073	1,70	1,85	0,001 7	0,028
-005	0,096	0,106	2,44	2,69	0,067	0,073	1,70	1,85	0,002 1	0,034
-006	0,109	0,119	2,77	3,02	0,067	0,073	1,70	1,85	0,002 2	0,036
-007	0,140	0,150	3,56	3,81	0,067	0,073	1,70	1,85	0,002 6	0,043
-008	0,171	0,181	4,34	4,60	0,067	0,073	1,70	1,85	0,003 0	0,049
-009	0,203	0,213	5,16	5,41	0,067	0,073	1,70	1,85	0,003 4	0,056
-010	0,234	0,244	5,94	6,20	0,067	0,073	1,70	1,85	0,003 7	0,061
-011	0,296	0,306	7,52	7,77	0,067	0,073	1,70	1,85	0,004 5	0,074
-012	0,359	0,369	9,12	9,37	0,067	0,073	1,70	1,85	0,005 2	0,085
-013	0,421	0,431	10,69	10,95	0,067	0,073	1,70	1,85	0,006 0	0,098
-014	0,484	0,494	12,29	12,55	0,067	0,073	1,70	1,85	0,006 8	0,111
-015	0,546	0,556	13,87	14,12	0,067	0,073	1,70	1,85	0,007 5	0,123
-016	0,609	0,619	15,47	15,72	0,067	0,073	1,70	1,85	0,0083	0,136
-017	0,671	0,681	17,04	17,30	0,067	0,073	1,70	1,85	0,009 0	0,147
-018	0,734	0,744	18,64	18,90	0,067	0,073	1,70	1,85	0,009 8	0,161
-019	0,795	0,807	20,19	20,50	0,067	0,073	1,70	1,85	0,010 5	0,172
-020	0,858	0,870	21,79	22,10	0,067	0,073	1,70	1,85	0,011 3	0,185
-021	0,920	0,932	23,36	23,67	0,067	0,073	1,70	1,85	0,012 0	0,197
-022	0,983	0,995	24,97	25,27	0,067	0,073	1,70	1,85	0,012 8	0,210
-023	1,045	1,057	26,54	26,85	0,067	0,073	1,70	1,85	0,013 6	0,223
-024	1,108	1,120	28,14	28,45	0,067	0,073	1,70	1,85	0,014 3	0,234
-025	1,170	1,182	29,72	30,02	0,067	0,073	1,70	1,85	0,015 1	0,247
-026	1,233	1,245	31,32	31,62	0,067	0,073	1,70	1,85	0,015 8	0,259
-027	1,295	1,307	32,89	33,20	0,067	0,073	1,70	1,85	0,016 6	0,272
-028	1,358	1,370	34,49	34,80	0,067	0,073	1,70	1,85	0,017 3	0,283
-029	1,479	1,499	37,57	38,07	0,067	0,073	1,70	1,85	0,018 8	0,308
-030	1,604	1,624	40,74	41,25	0,067	0,073	1,70	1,85	0,020 4	0,334

Table 1 (*continued*)

Size identification code	Internal diameter d_1				Cross section d_2				Volume (Ref.)	
	in		mm		in		mm			
	min.	max.	min.	max.	min.	max.	min.	max.	in^3	cm^3
-031	1,729	1,749	43,92	44,42	0,067	0,073	1,70	1,85	0,021 9	0,359
-032	1,854	1,874	47,09	47,60	0,067	0,073	1,70	1,85	0,023 4	0,383
-033	1,979	1,999	50,27	50,77	0,067	0,073	1,70	1,85	0,024 9	0,408
-034	2,104	2,124	53,44	53,95	0,067	0,073	1,70	1,85	0,026 4	0,433
-035	2,229	2,249	56,62	57,12	0,067	0,073	1,70	1,85	0,027 9	0,457
-036	2,354	2,374	59,79	60,30	0,067	0,073	1,70	1,85	0,029 4	0,482
-037	2,479	2,499	62,97	63,47	0,067	0,073	1,70	1,85	0,030 9	0,506
-038	2,604	2,624	66,14	66,65	0,067	0,073	1,70	1,85	0,032 5	0,533
-039	2,724	2,754	69,19	69,95	0,067	0,073	1,70	1,85	0,034 0	0,557
-040	2,849	2,879	72,36	73,13	0,067	0,073	1,70	1,85	0,035 5	0,582
-041	2,974	3,004	75,54	76,30	0,067	0,073	1,70	1,85	0,037 0	0,606
-042	3,224	3,254	81,89	82,65	0,067	0,073	1,70	1,85	0,040 0	0,655
-043	3,474	3,504	88,24	89,00	0,067	0,073	1,70	1,85	0,043 0	0,705
-044	3,724	3,754	94,59	95,35	0,067	0,073	1,70	1,85	0,046 1	0,755
-045	3,974	4,004	100,94	101,70	0,067	0,073	1,70	1,85	0,049 1	0,805
-046	4,224	4,254	107,29	108,05	0,067	0,073	1,70	1,85	0,052 1	0,854
-047	4,474	4,504	113,64	114,40	0,067	0,073	1,70	1,85	0,055 1	0,903
-048	4,724	4,754	119,99	120,75	0,067	0,073	1,70	1,85	0,058 1	0,952
-049	4,966	5,012	126,14	127,30	0,067	0,073	1,70	1,85	0,061 2	1,003
-050	5,216	5,262	132,49	133,65	0,067	0,073	1,70	1,85	0,064 2	1,052
*051 THRU *101	O-ring sizes not assigned									
-102	0,044	0,054	1,12	1,37	0,100	0,106	2,54	2,69	0,004 0	0,066
-103	0,076	0,086	1,93	2,18	0,100	0,106	2,54	2,69	0,004 8	0,079
-104	0,107	0,117	2,72	2,97	0,100	0,106	2,54	2,69	0,005 6	0,092
-105	0,138	0,148	3,51	3,76	0,100	0,106	2,54	2,69	0,006 4	0,105
-106	0,169	0,179	4,29	4,55	0,100	0,106	2,54	2,69	0,007 3	0,120
-107	0,201	0,211	5,11	5,36	0,100	0,106	2,54	2,69	0,008 1	0,133
-108	0,232	0,242	5,89	6,15	0,100	0,106	2,54	2,69	0,008 9	0,146
-109	0,294	0,304	7,47	7,72	0,100	0,106	2,54	2,69	0,010 5	0,172
-110	0,357	0,367	9,07	9,32	0,100	0,106	2,54	2,69	0,012 2	0,200

Table 1 (*continued*)

Size identification code	Internal diameter d_1				Cross section d_2				Volume (Ref.)	
	in		mm		in		mm			
	min.	max.	min.	max.	min.	max.	min.	max.	in^3	cm^3
-111	0,419	0,429	10,64	10,90	0,100	0,106	2,54	2,69	0,013 8	0,226
-112	0,482	0,492	12,24	12,50	0,100	0,106	2,54	2,69	0,015 4	0,252
-113	0,544	0,554	13,82	14,07	0,100	0,106	2,54	2,69	0,017 1	0,280
-114	0,607	0,617	15,42	15,67	0,100	0,106	2,54	2,69	0,018 7	0,306
-115	0,669	0,679	16,99	17,25	0,100	0,106	2,54	2,69	0,020 3	0,333
-116	0,732	0,742	18,59	18,85	0,100	0,106	2,54	2,69	0,022 0	0,361
-117	0,793	0,805	20,14	20,45	0,100	0,106	2,54	2,69	0,023 6	0,387
-118	0,856	0,868	21,74	22,05	0,100	0,106	2,54	2,69	0,025 3	0,415
-119	0,918	0,930	23,32	23,62	0,100	0,106	2,54	2,69	0,026 9	0,441
-120	0,981	0,993	24,92	25,22	0,100	0,106	2,54	2,69	0,028 5	0,467
-121	1,043	1,055	26,49	26,80	0,100	0,106	2,54	2,69	0,030 2	0,495
-122	1,106	1,118	28,09	28,40	0,100	0,106	2,54	2,69	0,031 8	0,521
-123	1,168	1,180	29,67	29,97	0,100	0,106	2,54	2,69	0,033 4	0,547
-124	1,231	1,243	31,27	31,57	0,100	0,106	2,54	2,69	0,035 1	0,575
-125	1,293	1,305	32,84	33,15	0,100	0,106	2,54	2,69	0,036 7	0,601
-126	1,356	1,368	34,44	34,74	0,100	0,106	2,54	2,69	0,038 3	0,628
-127	1,418	1,430	36,02	36,32	0,100	0,106	2,54	2,69	0,040 0	0,655
-128	1,481	1,493	37,62	37,92	0,100	0,106	2,54	2,69	0,041 6	0,682
-129	1,539	1,559	39,09	39,60	0,100	0,106	2,54	2,69	0,043 2	0,708
-130	1,602	1,622	40,69	41,20	0,100	0,106	2,54	2,69	0,044 9	0,736
-131	1,664	1,684	42,27	42,77	0,100	0,106	2,54	2,69	0,046 5	0,762
-132	1,727	1,747	43,87	44,37	0,100	0,106	2,54	2,69	0,048 2	0,790
-133	1,789	1,809	45,44	45,95	0,100	0,106	2,54	2,69	0,049 8	0,816
-134	1,852	1,872	47,04	47,55	0,100	0,106	2,54	2,69	0,051 4	0,842
-135	1,915	1,935	48,64	49,15	0,100	0,106	2,54	2,69	0,053 1	0,870
-136	1,977	1,997	50,22	50,72	0,100	0,106	2,54	2,69	0,054 7	0,896
-137	2,040	2,060	51,82	52,32	0,100	0,106	2,54	2,69	0,056 4	0,924
-138	2,102	2,122	53,39	53,90	0,100	0,106	2,54	2,69	0,058 0	0,950
-139	2,165	2,185	54,99	55,50	0,100	0,106	2,54	2,69	0,059 6	0,977
-140	2,227	2,247	56,57	57,07	0,100	0,106	2,54	2,69	0,061 3	1,005

Table 1 (*continued*)

Size identification code	Internal diameter d_1				Cross section d_2				Volume (Ref.)	
	in		mm		in		mm			
	min.	max.	min.	max.	min.	max.	min.	max.	in^3	cm^3
-141	2,290	2,310	58,17	58,67	0,100	0,106	2,54	2,69	0,062 9	1,031
-142	2,352	2,372	59,74	60,25	0,100	0,106	2,54	2,69	0,064 5	1,057
-143	2,415	2,435	61,34	61,85	0,100	0,106	2,54	2,69	0,066 2	1,085
-144	2,477	2,497	62,92	63,42	0,100	0,106	2,54	2,69	0,067 8	1,111
-145	2,540	2,560	64,52	65,02	0,100	0,106	2,54	2,69	0,069 4	1,137
-146	2,602	2,622	66,09	66,60	0,100	0,106	2,54	2,69	0,071 1	1,165
-147	2,660	2,690	67,56	68,33	0,100	0,106	2,54	2,69	0,072 7	1,191
-148	2,722	2,752	69,14	69,90	0,100	0,106	2,54	2,69	0,074 3	1,218
-149	2,785	2,815	70,74	71,50	0,100	0,106	2,54	2,69	0,076 0	1,245
-150	2,847	2,877	72,31	73,07	0,100	0,106	2,54	2,69	0,077 6	1,272
-151	2,972	3,002	75,49	76,25	0,100	0,106	2,54	2,69	0,080 9	1,326
-152	3,222	3,252	81,84	82,60	0,100	0,106	2,54	2,69	0,087 4	1,432
-153	3,472	3,502	88,19	88,95	0,100	0,106	2,54	2,69	0,094 0	1,540
-154	3,722	3,752	94,54	95,30	0,100	0,106	2,54	2,69	0,100 5	1,647
-155	3,972	4,002	100,89	101,65	0,100	0,106	2,54	2,69	0,107 1	1,755
-156	4,222	4,252	107,24	108,00	0,100	0,106	2,54	2,69	0,113 6	1,862
-157	4,472	4,502	113,59	114,35	0,100	0,106	2,54	2,69	0,120 2	1,970
-158	4,722	4,752	119,94	120,70	0,100	0,106	2,54	2,69	0,126 7	2,076
-159	4,972	5,002	126,29	127,05	0,100	0,106	2,54	2,69	0,133 2	2,183
-160	5,214	5,260	132,43	133,60	0,100	0,106	2,54	2,69	0,139 8	2,291
-161	5,464	5,510	138,79	139,95	0,100	0,106	2,54	2,69	0,146 3	2,397
-162	5,714	5,760	145,14	146,30	0,100	0,106	2,54	2,69	0,152 9	2,506
-163	5,964	6,010	151,49	152,65	0,100	0,106	2,54	2,69	0,159 4	2,612
-164	6,214	6,260	157,84	159,00	0,100	0,106	2,54	2,69	0,166 0	2,720
-165	6,464	6,510	164,19	165,35	0,100	0,106	2,54	2,69	0,172 5	2,827
-166	6,714	6,760	170,54	171,70	0,100	0,106	2,54	2,69	0,179 0	2,933
-167	6,964	7,010	176,89	178,05	0,100	0,106	2,54	2,69	0,185 6	3,041
-168	7,207	7,267	183,06	184,58	0,100	0,106	2,54	2,69	0,192 1	3,148
-169	7,457	7,517	189,41	190,93	0,100	0,106	2,54	2,69	0,198 7	3,256
-170	7,707	7,767	195,76	197,28	0,100	0,106	2,54	2,69	0,205 2	3,363

Table 1 (*continued*)

Size identification code	Internal diameter d_1				Cross section d_2				Volume (Ref.)	
	in		mm		in		mm			
	min.	max.	min.	max.	min.	max.	min.	max.	in^3	cm^3
-171	7,957	8,017	202,11	203,63	0,100	0,106	2,54	2,69	0,211 8	3,471
-172	8,207	8,267	208,46	209,98	0,100	0,106	2,54	2,69	0,218 3	3,577
-173	8,457	8,517	214,81	216,33	0,100	0,106	2,54	2,69	0,224 9	3,685
-174	8,707	8,767	221,16	222,68	0,100	0,106	2,54	2,69	0,231 4	3,792
-175	8,957	9,017	227,51	229,03	0,100	0,106	2,54	2,69	0,237 9	3,898
-176	9,207	9,267	233,86	235,38	0,100	0,106	2,54	2,69	0,244 5	4,007
-177	9,457	9,517	240,21	241,73	0,100	0,106	2,54	2,69	0,251 0	4,113
-178	9,707	9,767	246,56	248,08	0,100	0,106	2,54	2,69	0,257 6	4,221
*179 THRU *200	O-ring sizes not assigned									
-201	0,166	0,176	4,22	4,47	0,135	0,143	3,43	3,63	0,014 8	0,243
-202	0,229	0,239	5,82	6,07	0,135	0,143	3,43	3,63	0,017 8	0,292
-203	0,291	0,301	7,39	7,65	0,135	0,143	3,43	3,63	0,020 7	0,339
-204	0,354	0,364	8,99	9,25	0,135	0,143	3,43	3,63	0,023 7	0,388
-205	0,416	0,426	10,57	10,82	0,135	0,143	3,43	3,63	0,026 7	0,438
-206	0,479	0,489	12,17	12,42	0,135	0,143	3,43	3,63	0,029 7	0,487
-207	0,541	0,551	13,74	14,00	0,135	0,143	3,43	3,63	0,032 7	0,536
-208	0,604	0,614	15,34	15,60	0,135	0,143	3,43	3,63	0,035 7	0,585
-209	0,666	0,676	16,92	17,17	0,135	0,143	3,43	3,63	0,038 6	0,633
-210	0,728	0,740	18,49	18,80	0,135	0,143	3,43	3,63	0,041 6	0,682
-211	0,790	0,802	20,07	20,37	0,135	0,143	3,43	3,63	0,044 6	0,731
-212	0,853	0,865	21,67	21,97	0,135	0,143	3,43	3,63	0,047 6	0,780
-213	0,915	0,927	23,24	23,55	0,135	0,143	3,43	3,63	0,050 5	0,828
-214	0,978	0,990	24,84	25,15	0,135	0,143	3,43	3,63	0,053 5	0,877
-215	1,040	1,052	26,42	26,72	0,135	0,143	3,43	3,63	0,056 5	0,926
-216	1,103	1,115	28,02	28,32	0,135	0,143	3,43	3,63	0,059 5	0,975
-217	1,165	1,177	29,59	29,90	0,135	0,143	3,43	3,63	0,062 5	1,024
-218	1,228	1,240	31,19	31,50	0,135	0,143	3,43	3,63	0,065 5	1,073
-219	1,290	1,302	32,77	33,07	0,135	0,143	3,43	3,63	0,068 4	1,121
-220	1,353	1,365	34,37	34,67	0,135	0,143	3,43	3,63	0,071 4	1,170