INTERNATIONAL STANDARD

ISO 16031-2

First edition
2003-09-01

Aerospace fluid systems — O-rings, inch series: Inside diameters and cross sections, tolerances and size-identification codes —

Part 2: Standard tolerances for non-hydraulic systems

Systèmes aérospaciaux de fluides — Joints toriques, série en inches: diamètres intérieurs et sections, tolérances et codes d'identification dimensionnelle —
Partie 2: Tolérances standards pour systèmes non hydrauliques

Reference number
ISO 16031-2:2003(E)

ISO copyright office
Case postale 56 • CH-1211 Geneva 20
Tel. + 41 22 749 01 11
Fax + 41 22 749 09 47
E-mail copyright@iso.org
Web www.iso.org

Published in Switzerland

Foreword

ISO (the International Organization for Standardization) is a worldwide federation of national standards bodies (ISO member bodies). The work of preparing International Standards is normally carried out through ISO technical committees. Each member body interested in a subject for which a technical committee has been established has the right to be represented on that committee. International organizations, governmental and non-governmental, in liaison with ISO, also take part in the work. ISO collaborates closely with the International Electrotechnical Commission (IEC) on all matters of electrotechnical standardization.

International Standards are drafted in accordance with the rules given in the ISO/IEC Directives, Part 2.

The main task of technical committees is to prepare International Standards. Draft International Standards adopted by the technical committees are circulated to the member bodies for voting. Publication as an International Standard requires approval by at least 75 % of the member bodies casting a vote.

Attention is drawn to the possibility that some of the elements of this document may be the subject of patent rights. ISO shall not be held responsible for identifying any or all such patent rights.

ISO 16031-2 was prepared by Technical Committee ISO/TC 20, *Aircraft and space vehicles*, Subcommittee SC 10, *Aerospace fluid systems and components*.

ISO 16031 consists of the following parts, under the general title *Aerospace fluid systems — O-rings, inch series: Inside diameters and cross sections, tolerances and size-identification codes*:

— *Part 1: Close tolerances for hydraulic systems*

— *Part 2: Standard tolerances for non-hydraulic systems*

Introduction

In fluid power systems, power is transmitted through a fluid (liquid or gas) under pressure within an enclosed circuit. Components are designed to meet these requirements under varying conditions. Testing of components to meet performance requirements provides users with a basis of assurance for determining design applications and for checking component compliance with their stated requirements.

Aerospace fluid systems — O-rings, inch series: Inside diameters and cross sections, tolerances and size-identification codes —

Part 2:
Standard tolerances for non-hydraulic systems

1 Scope

This part of ISO 16031 specifies the inside diameters, cross-sections, tolerances and size identification codes for inch O-rings used in aerospace fluid systems intended for use in non-hydraulic systems.

This part of ISO 16031 is applicable, provided that suitable tooling is available, to O-rings made from all other elastomeric materials other than nitrile and ethylene propylene materials, for which ISO 16031-1 specifies the dimensions.

Specifications for O-rings with an inside diameter $d_1 \leq 12{,}7$ mm have been taken from ISO 16031-1, because the same tolerances are applicable to the O-rings in this part of ISO 16031.

2 Normative references

The following referenced documents are indispensable for the application of this document. For dated references, only the edition cited applies. For undated references, the latest edition of the referenced document (including any amendments) applies.

ISO 5598:1985, *Fluid power systems and components — Vocabulary*

3 Terms and definitions

For the purposes of this document, the terms and definitions given in ISO 5598 apply.

NOTE Throughout this part of ISO 16031, the term “O-ring” has been adopted although the correct technical term is “toroidal sealing ring”.

4 Configuration

The shape of the O-ring shall be toroidal as shown in Figure 1.

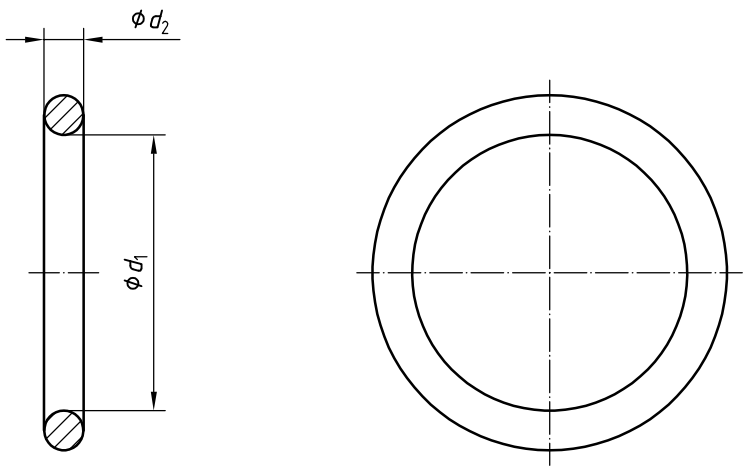

Key

d_1 inside diameter

d_2 cross-section diameter

Figure 1 — Typical O-ring configuration

5 Inside diameters, cross-sections and tolerances

The combinations of inside diameters, d_1, cross-sections, d_2, and O-ring tolerances shall be chosen from Tables 1 and 2.

6 Size identification code

6.1 Table 1 lists the dimensions of O-rings and their corresponding size identification code from -001 to -475. The size identification codes are divided into groups of one hundred and within each group are sequential and not significant. Each group of one hundred identifies the cross-section size of the O-rings within the group.

EXAMPLE - 0 2 5 O-ring size identification code

- Reference number allocated to an O-ring internal diameter size
- Signifies that the O-ring has a cross-section of 0,070 in (1,78 mm)

Reference to Table 1 establishes that -025 represents an O-ring with a cross-section of 0,070 in (1,78 mm) and an internal diameter of 1,165 in to 1,187 in (29,59 mm to 30,15 mm).

6.2 Table 2 lists the dimensions of O-rings and their corresponding size identification code for the 900 series, which includes all of the currently standardized O-rings for sealing straight thread tube-fitting bosses. This series utilizes a significant dash numbering system, where the dash number designates the tube size in 1/16ths in, with the exception of the -901, which is intended for a 0,093 8 in (2,38 mm) nominal outside diameter tube.

EXAMPLE - 9 1 8 O-ring size identification code

Signifies that the O-ring is for an 18/16ths, i.e. 1,125 in (28,58 mm) tube size

Signifies that the O-ring is for a straight thread tube-fitting boss

Table 1 — Inside diameters, cross-sections and tolerances

Size identification code	Internal diameter d_1				Cross-section d_2				Volume (Ref.)	
	in		mm		in		mm		in^3	cm^3
	min.	max.	min.	max.	min.	max.	min.	max.		
-001	0,025	0,033	0,64	0,84	0,037	0,043	0,94	1,09	0,000 3	0,005
-002	0,038	0,046	0,97	1,17	0,047	0,053	1,19	1,35	0,000 6	0,010
-003	0,052	0,060	1,32	1,52	0,057	0,063	1,45	1,60	0,001 0	0,016
-004	0,065	0,075	1,65	1,90	0,067	0,073	1,70	1,85	0,001 7	0,028
-005	0,096	0,106	2,44	2,69	0,067	0,073	1,70	1,85	0,002 1	0,034
-006	0,109	0,119	2,77	3,02	0,067	0,073	1,70	1,85	0,002 2	0,036
-007	0,140	0,150	3,56	3,81	0,067	0,073	1,70	1,85	0,002 6	0,043
-008	0,171	0,181	4,34	4,60	0,067	0,073	1,70	1,85	0,003 0	0,049
-009	0,203	0,213	5,16	5,41	0,067	0,073	1,70	1,85	0,003 4	0,056
-010	0,234	0,244	5,94	6,20	0,067	0,073	1,70	1,85	0,003 7	0,061
-011	0,296	0,306	7,52	7,77	0,067	0,073	1,70	1,85	0,004 5	0,074
-012	0,359	0,369	9,12	9,37	0,067	0,073	1,70	1,85	0,005 2	0,085
-013	0,421	0,431	10,69	10,95	0,067	0,073	1,70	1,85	0,006 0	0,098
-014	0,484	0,494	12,29	12,55	0,067	0,073	1,70	1,85	0,006 8	0,111
-015	0,544	0,558	13,82	14,17	0,067	0,073	1,70	1,85	0,007 5	0,123
-016	0,605	0,623	15,37	15,82	0,067	0,073	1,70	1,85	0,008 3	0,136
-017	0,667	0,685	16,94	17,40	0,067	0,073	1,70	1,85	0,009 0	0,147
-018	0,730	0,748	18,54	19,00	0,067	0,073	1,70	1,85	0,009 8	0,161
-019	0,792	0,810	20,12	20,57	0,067	0,073	1,70	1,85	0,010 5	0,172
-020	0,855	0,873	21,72	22,17	0,067	0,073	1,70	1,85	0,011 3	0,185
-021	0,917	0,935	23,29	23,75	0,067	0,073	1,70	1,85	0,012 0	0,197
-022	0,979	0,999	24,87	25,37	0,067	0,073	1,70	1,85	0,012 8	0,210
-023	1,041	1,061	26,44	26,95	0,067	0,073	1,70	1,85	0,013 6	0,223
-024	1,104	1,124	28,04	28,55	0,067	0,073	1,70	1,85	0,014 3	0,234
-025	1,165	1,187	29,59	30,15	0,067	0,073	1,70	1,85	0,015 1	0,247
-026	1,228	1,250	31,19	31,75	0,067	0,073	1,70	1,85	0,015 8	0,259
-027	1,290	1,312	32,77	33,32	0,067	0,073	1,70	1,85	0,016 6	0,272
-028	1,351	1,377	34,32	34,98	0,067	0,073	1,70	1,85	0,017 3	0,283
-029	1,476	1,502	37,49	38,15	0,067	0,073	1,70	1,85	0,018 8	0,308
-030	1,601	1,627	40,67	41,33	0,067	0,073	1,70	1,85	0,020 4	0,334
-031	1,724	1,754	43,79	44,55	0,067	0,073	1,70	1,85	0,021 9	0,359
-032	1,849	1,879	46,96	47,73	0,067	0,073	1,70	1,85	0,023 4	0,383
-033	1,971	2,007	50,06	50,98	0,067	0,073	1,70	1,85	0,024 9	0,408
-034	2,096	2,132	53,24	54,15	0,067	0,073	1,70	1,85	0,026 4	0,433
-035	2,221	2,257	56,41	57,33	0,067	0,073	1,70	1,85	0,027 9	0,457
-036	2,346	2,382	59,59	60,50	0,067	0,073	1,70	1,85	0,029 4	0,482
-037	2,471	2,507	62,76	63,68	0,067	0,073	1,70	1,85	0,030 9	0,506
-038	2,594	2,634	65,89	66,90	0,067	0,073	1,70	1,85	0,032 5	0,533
-029	2,719	2,759	69,06	70,08	0,067	0,073	1,70	1,85	0,034 0	0,557
-040	2,844	2,884	72,24	73,25	0,067	0,073	1,70	1,85	0,035 5	0,582
-041	2,965	3,013	75,31	76,53	0,067	0,073	1,70	1,85	0,037 0	0,606
-042	3,215	3,263	81,66	82,88	0,067	0,073	1,70	1,85	0,040 0	0,655
-043	3,465	3,513	88,01	89,23	0,067	0,073	1,70	1,85	0,043 0	0,705
-044	3,712	3,766	94,28	95,66	0,067	0,073	1,70	1,85	0,046 1	0,755
-045	3,962	4,016	100,63	102,01	0,067	0,073	1,70	1,85	0,049 1	0,805

Table 1 (*continued*)

Size identification code	Internal diameter d_1				Cross-section d_2				Volume (Ref.)	
	in		mm		in		mm		in^3	cm^3
	min.	max.	min.	max.	min.	max.	min.	max.		
-046	4,209	4,269	106,91	108,43	0,067	0,073	1,70	1,85	0,052 1	0,854
-047	4,459	4,519	113,26	114,78	0,067	0,073	1,70	1,85	0,055 1	0,903
-048	4,709	4,769	119,61	121,13	0,067	0,073	1,70	1,85	0,058 1	0,952
-049	4,952	5,026	125,78	127,66	0,067	0,073	1,70	1,85	0,061 2	1,003
-050	5,202	5,276	132,13	134,01	0,067	0,073	1,70	1,85	0,064 2	1,052
*051 to *101	O-ring sizes not assigned									
-102	0,044	0,054	1,12	1,37	0,100	0,106	2,54	2,69	0,004 0	0,066
-103	0,076	0,086	1,93	2,18	0,100	0,106	2,54	2,69	0,004 8	0,079
-104	0,107	0,117	2,72	2,97	0,100	0,106	2,54	2,69	0,005 6	0,092
-105	0,138	0,148	3,51	3,76	0,100	0,106	2,54	2,69	0,006 4	0,105
-106	0,169	0,179	4,29	4,55	0,100	0,106	2,54	2,69	0,007 3	0,120
-107	0,201	0,211	5,11	5,36	0,100	0,106	2,54	2,69	0,008 1	0,133
-108	0,232	0,242	5,89	6,15	0,100	0,106	2,54	2,69	0,008 9	0,146
-109	0,294	0,304	7,47	7,72	0,100	0,106	2,54	2,69	0,010 5	0,172
-110	0,357	0,367	9,07	9,32	0,100	0,106	2,54	2,69	0,012 2	0,200
-111	0,419	0,429	10,64	10,90	0,100	0,106	2,54	2,69	0,013 8	0,226
-112	0,482	0,492	12,24	12,50	0,100	0,106	2,54	2,69	0,015 4	0,252
-113	0,542	0,556	13,77	14,12	0,100	0,106	2,54	2,69	0,017 1	0,280
-114	0,603	0,621	15,32	15,77	0,100	0,106	2,54	2,69	0,018 7	0,306
-115	0,665	0,683	16,89	17,35	0,100	0,106	2,54	2,69	0,020 3	0,333
-116	0,728	0,746	18,49	18,95	0,100	0,106	2,54	2,69	0,022 0	0,361
-117	0,789	0,809	20,04	20,55	0,100	0,106	2,54	2,69	0,023 6	0,387
-118	0,852	0,872	21,64	22,15	0,100	0,106	2,54	2,69	0,025 3	0,415
-119	0,914	0,934	23,22	23,72	0,100	0,106	2,54	2,69	0,026 9	0,441
-120	0,977	0,997	24,82	25,32	0,100	0,106	2,54	2,69	0,028 5	0,467
-121	1,039	1,059	26,39	26,90	0,100	0,106	2,54	2,69	0,030 2	0,495
-122	1,102	1,122	27,99	28,50	0,100	0,106	2,54	2,69	0,031 8	0,521
-123	1,162	1,186	29,51	30,12	0,100	0,106	2,54	2,69	0,033 4	0,547
-124	1,225	1,249	31,12	31,72	0,100	0,106	2,54	2,69	0,035 1	0,575
-125	1,287	1,311	32,69	33,30	0,100	0,106	2,54	2,69	0,036 7	0,601
-126	1,350	1,374	34,29	34,90	0,100	0,106	2,54	2,69	0,038 3	0,628
-127	1,412	1,436	35,86	36,47	0,100	0,106	2,54	2,69	0,040 0	0,655
-128	1,475	1,499	37,46	38,07	0,100	0,106	2,54	2,69	0,041 6	0,682
-129	1,534	1,564	38,96	39,73	0,100	0,106	2,54	2,69	0,043 2	0,708
-130	1,597	1,627	40,56	41,33	0,100	0,106	2,54	2,69	0,044 9	0,736
-131	1,659	1,689	42,14	42,90	0,100	0,106	2,54	2,69	0,046 5	0,762
-132	1,722	1,752	43,74	44,50	0,100	0,106	2,54	2,69	0,048 2	0,790
-133	1,784	1,814	45,31	46,08	0,100	0,106	2,54	2,69	0,049 8	0,816
-134	1,847	1,877	46,91	47,68	0,100	0,106	2,54	2,69	0,051 4	0,842
-135	1,908	1,942	48,46	49,33	0,100	0,106	2,54	2,69	0,053 1	0,870