ETSI TS 102 744-3-8 V1.1.1 (2015-10)

TECHNICAL SPECIFICATION

Satellite Earth Stations and Systems (SES);
Family SL Satellite Radio Interface (Release 1);
Part 3: Control Plane and User Plane Specifications;
Sub-part 8: NAS Layer and User Plane Operation
for MBMS Services

iTeh STANDARD PREVIEW
(standards.iteh.ai)
Full standard:
https://standards.iteh.ai/catalog/standards/sist/d8399881-045d-4d2f-a379-2c2a4f55b4f3/etsi-ts-102-744-3-8-v1.1.1-2015-10

Reference

DTS/SES-00299-3-8

Keywords

3GPP, GPRS, GSM, GSO, interface, MSS, radio, satellite, TDM, TDMA, UMTS

ETSI

650 Route des Lucioles
F-06921 Sophia Antipolis Cedex - FRANCE

Tel.: +33 4 92 94 42 00 Fax: +33 4 93 65 47 16

Siret N° 348 623 562 00017 - NAF 742 C
Association à but non lucratif enregistrée à la
Sous-Préfecture de Grasse (06) N° 7803/88

iTeh STANDARD PREVIEW
(standards.iteh.ai)
Full standard:
https://standards.iteh.ai/catalog/standards/sist/d8399881-7d4d-4d2f-a379-2c2e475b4f39/etsi-ts-102-744-3-8-v1.1.1-2015-10

Important notice

The present document can be downloaded from:
http://www.etsi.org/standards-search

The present document may be made available in electronic versions and/or in print. The content of any electronic and/or print versions of the present document shall not be modified without the prior written authorization of ETSI. In case of any existing or perceived difference in contents between such versions and/or in print, the only prevailing document is the print of the Portable Document Format (PDF) version kept on a specific network drive within ETSI Secretariat.

Users of the present document should be aware that the document may be subject to revision or change of status. Information on the current status of this and other ETSI documents is available at
http://portal.etsi.org/tb/status/status.asp

If you find errors in the present document, please send your comment to one of the following services:
https://portal.etsi.org/People/CommiteeSupportStaff.aspx

Copyright Notification

No part may be reproduced or utilized in any form or by any means, electronic or mechanical, including photocopying and microfilm except as authorized by written permission of ETSI.
The content of the PDF version shall not be modified without the written authorization of ETSI.
The copyright and the foregoing restriction extend to reproduction in all media.

© European Telecommunications Standards Institute 2015.
All rights reserved.

DECT™, **PLUGTESTS**™, **UMTS**™ and the ETSI logo are Trade Marks of ETSI registered for the benefit of its Members.
3GPP™ and **LTE**™ are Trade Marks of ETSI registered for the benefit of its Members and of the 3GPP Organizational Partners.
GSM® and the GSM logo are Trade Marks registered and owned by the GSM Association.

Contents

Intellectual Property Rights 5
Foreword 5
Modal verbs terminology 5
Introduction 5
1 Scope 6
2 References 6
2.1 Normative references 6
2.2 Informative references 7
3 Abbreviations 7
4 Introduction 7
4.1 Network Architecture 7
4.2 Protocol Architecture 8
5 MBMS NAS Layer Operations 9
5.1 MBMS Mobility Management procedures 9
5.1.1 GPRS Attach to BM Domain 9
5.1.1.1 Successful GPRS Attach Procedure 9
5.1.1.2 Unsuccessful GPRS Attach Procedure 10
5.1.2 GPRS Detach 10
5.1.2.0 General 10
5.1.2.1 CN-initiated GPRS Detach Request 10
5.1.2.2 UE-initiated GPRS Detach Request 11
5.2 MBMS Service Management Procedures 12
5.2.1 MBMS Service Activation 12
5.2.1.0 General 12
5.2.1.1 MBMS Context Activation 12
5.2.1.2 CN-initiated MBMS Context Activation 13
5.2.1.3 Unsuccessful MBMS Context Activation (Service not authorized) 14
5.2.1.4 Unsuccessful MBMS Context activation (Critical failure or Layer 2 establishment rejection) 14
5.2.2 MBMS Context Deactivation 15
5.2.2.0 General 15
5.2.2.1 UE Initiated MBMS Context Deactivation 15
5.2.2.2 Core Network Initiated MBMS Context Deactivation 16
5.3 MBMS Bearer Management procedures 16
5.3.1 Radio Access Bearer Release 16
5.3.2 MBMS Radio Access Bearer Release 17
5.3.3 MBMS Radio Access Bearer Modify 17
5.3.4 MBMS Radio Access Bearer Modification Request 17
5.3.5 MBMS Service modification 18
5.3.6 MBMS Service Removal 19
6 Mobility Management Behaviour 20
6.1 Spot Beam Handover 20
6.2 Inter-RNC operation (via different satellites) 21
6.3 Inter-system mobility 21
7 Exception handling 21
7.1 Forced Detach (CN Initiated) 21
7.2 Primary PDP Context deactivation (while MBMS Contexts present) 21
8 IP User Plane Handler for MBMS Services 22
8.0 General 22
8.1 UE-TE Controller triggered MBMS Services via R-interface 22
8.1.1 Activation of MBMS Services 22
8.1.2 Deactivation of MBMS Services 22
8.2 Directly Connected TEs - use of IGMP as a trigger 22

iTeh STANDARD PREVIEW
(standards.iteh.ai)
Full standard:
https://standards.iteh.ai/catalog/standards/sist/d8399881-d8d4-402f-ac75-32ca4753a4b9/etsi-ts-102-744-3-8-v1.1.1-2015-10

8.2.0 General 22
8.2.1 Joining and leaving multicast services 22
8.2.2 Maintenance of multicast services - IGMP query mechanism 23
8.3 Routers in the mobile domain - PIM-SM triggered MBMS Services 23
8.3.1 Joining and leaving multicast services 23
8.3.2 Source Specific Multicast (SSM) and Any Source Multicast (ASM) with Rendezvous point in the terrestrial domain 23
8.3.2.0 General 23
8.3.2.1 Multicast Receivers with a Mobile Domain Router 24
8.3.2.2 ASM Multicast Sources with a Mobile Domain Router 25
8.3.2.3 SSM Multicast Sources with a Mobile Domain Router 26
8.3.3 Rendezvous Point in the Mobile Domain 27
8.3.3.0 General 27
8.3.3.1 Multicast Receivers with a Mobile Domain Rendezvous Point 28
8.3.3.2 Multicast Sources with a Mobile Domain Rendezvous Point 28
8.3.4 Maintenance of IP-Multicast Services using PIM-SM 29
8.4 BMSC triggered MBMS Services 29
History 30

iTeh STANDARD PREVIEW
(standards.iteh.ai)
Full standard:
https://standards.iteh.ai/catalog/standards/sist/d8399881-045d-4d2f-a379-2c2a475b4f39/etsi-ts-102-744-3-8-v1.1.1-2015-10

Intellectual Property Rights

IPRs essential or potentially essential to the present document may have been declared to ETSI. The information pertaining to these essential IPRs, if any, is publicly available for **ETSI members and non-members**, and can be found in ETSI SR 000 314: *"Intellectual Property Rights (IPRs); Essential, or potentially Essential, IPRs notified to ETSI in respect of ETSI standards"*, which is available from the ETSI Secretariat. Latest updates are available on the ETSI Web server (http://ipr.etsi.org).

Pursuant to the ETSI IPR Policy, no investigation, including IPR searches, has been carried out by ETSI. No guarantee can be given as to the existence of other IPRs not referenced in ETSI SR 000 314 (or the updates on the ETSI Web server) which are, or may be, or may become, essential to the present document.

Foreword

This Technical Specification (TS) has been produced by ETSI Technical Committee Satellite Earth Stations and Systems (SES).

The present document is part 3, sub-part 8 of a multi-part deliverable. Full details of the entire series can be found in ETSI TS 102 744-1-1.

Modal verbs terminology

In the present document "**shall**", "**shall not**", "**should**", "**should not**", "**may**", "**need not**", "**will**", "**will not**", "**can**" and "**cannot**" are to be interpreted as described in clause 3.2 of the ETSI Drafting Rules (Verbal forms for the expression of provisions).

"**must**" and "**must not**" are **NOT** allowed in ETSI deliverables except when used in direct citation.

Introduction

This multi-part deliverable (Release 1) defines a satellite radio interface that provides UMTS services to users of UEs via geostationary (GEO) satellites in the frequency range 1 518,000 MHz to 1 559,000 MHz (downlink) and 1 626,500 MHz to 1 660,500 MHz and 1 668,000 MHz to 1 675,000 MHz (uplink).

iTeh STANDARD PREVIEW
(standards.iteh.ai)
Full standard:
https://standards.iteh.ai/catalog/standards/sist/d8399881-045d-4d2f-a379-2c2a475b4f39/etsi-ts-102-744-3-8-v1.1.1-2015-10

1 Scope

The present document defines the operation of Multimedia Broadcast Multicast Services (MBMS) in support of efficient delivery of IP multicast traffic across the Family SL satellite radio interface. This includes extensions to the Non-Access Stratum (NAS) Layer peer-to-peer interface (defined in ETSI TS 124 007 [1] and ETSI TS 124 008 [2]) between the User Equipment (UE) and a new architectural entity defined as the Broadcast Multicast Service Node (BMSN). In addition, extensions to the IP User Plane Handler (UPH) to interpret IP multicast management and routing protocols are defined in the present document to allow automated triggering of MBMS services as defined for the Family SL satellite radio interface.

2 References

2.1 Normative references

References are either specific (identified by date of publication and/or edition number or version number) or non-specific. For specific references, only the cited version applies. For non-specific references, the latest version of the reference document (including any amendments) applies.

Referenced documents which are not found to be publicly available in the expected location might be found at http://docbox.etsi.org/Reference.

NOTE: While any hyperlinks included in this clause were valid at the time of publication, ETSI cannot guarantee their long term validity.

The following referenced documents are necessary for the application of the present document.

[1] ETSI TS 124 007: "Digital cellular telecommunications system (Phase 2+); Universal Mobile Telecommunications System (UMTS); Mobile radio interface signalling layer 3; General Aspects (3GPP TS 24.007 Release 4)".

[2] ETSI TS 124 008: "Digital cellular telecommunications system (Phase 2+); Universal Mobile Telecommunications System (UMTS); Mobile radio interface Layer 3 specification; Core network protocols; Stage 3 (3GPP TS 24.008 Release 4)".

[3] ETSI TS 102 744-1-4: "Satellite Earth Stations and Systems (SES); Family SL Satellite Radio Interface (Release 1); Part 1: General Specifications; Sub-part 4: Applicable External Specifications, Symbols and Abbreviations".

[4] ETSI TS 102 744-3-2: "Satellite Earth Stations and Systems (SES); Family SL Satellite Radio Interface (Release 1); Part 3: Control Plane and User Plane Specifications; Sub-part 2: Bearer Control Layer Operation".

[5] ETSI TS 102 744-3-6: "Satellite Earth Stations and Systems (SES); Family SL Satellite Radio Interface (Release 1); Part 3: Control Plane and User Plane Specifications; Sub-part 6: Adaptation Layer Operation".

[6] ETSI TS 102 744-3-7: "Satellite Earth Stations and Systems (SES); Family SL Satellite Radio Interface (Release 1); Part 3: Control Plane and User Plane Specifications; Sub-part 7: NAS Layer Interface Extensions for MBMS Services".

iTeh STANDARD PREVIEW
(standards.iteh.ai)
Full standard:
https://standards.iteh.ai/catalog/standards/sist/d8509881-0450-4f5-a879-2293f754f39/ets-ts-102-744-3-8-v1.1.1-2015-10

2.2 Informative references

References are either specific (identified by date of publication and/or edition number or version number) or non-specific. For specific references, only the cited version applies. For non-specific references, the latest version of the reference document (including any amendments) applies.

NOTE: While any hyperlinks included in this clause were valid at the time of publication, ETSI cannot guarantee their long term validity.

The following referenced documents are not necessary for the application of the present document but they assist the user with regard to a particular subject area.

[i.1] ETSI TS 123 246: "Universal Mobile Telecommunications System (UMTS); Multimedia Broadcast/Multicast Service (MBMS); Architecture and functional description (3GPP TS 23.246 Release 7)".

3 Abbreviations

For the purposes of the present document, the abbreviations in clause 3 of ETSI TS 102 744-1-4 [3] apply.

4 Introduction

4.1 Network Architecture

Figure 4.1 presents the network architecture of this multi-part deliverable (Release 1) illustrating the entities which are responsible for the provision of Multimedia Broadcast Multicast Services (MBMS). This includes:

- the Broadcast Multicast Service Node (BMSN), which contains the agents for the Non-Access Stratum signalling and for replication of traffic associated with MBMS via multiple RNCs; and
- the Broadcast Multicast Service Centre (BMSC), which contains the Broadcast Multicast Management Function (BMMF) responsible for control of access to MBMS Services.

iTeh STANDARD PREVIEW
(standards.iteh.ai)
Full standard:
https://standards.iteh.ai/catalog/standards/sist/d8399881-045d-4d2f-a379-2c2a475b4f3e/etsi-ts-102-744-3-8-v1.1.1-2015-10

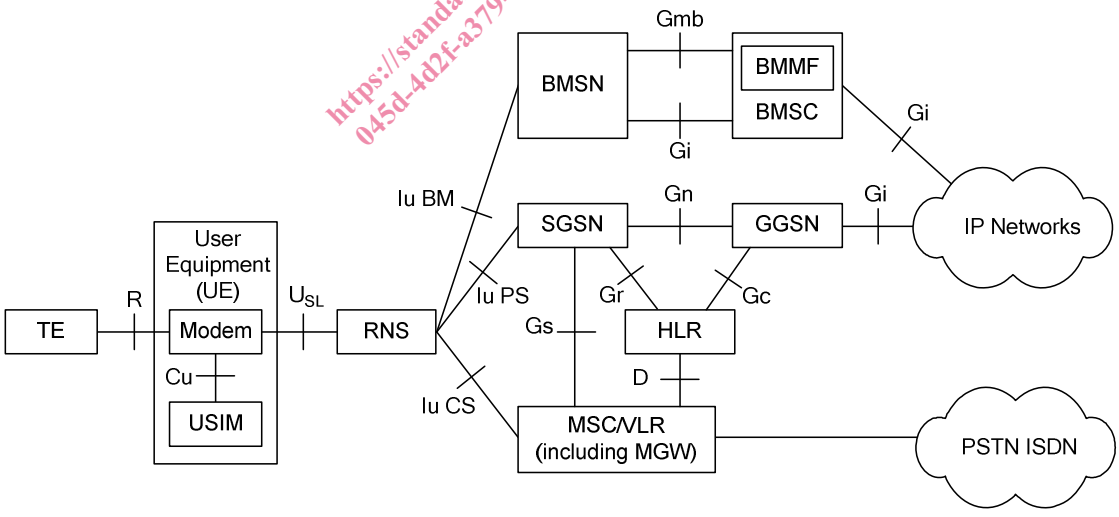

Figure 4.1: Network architecture showing BM domain entities

The Gmb interface is used to control access to the Multimedia Broadcast and Multicast Services (MBMS) that are offered by the Broadcast Multicast domain of the Core Network (the BMSN and the BMSC). This interface performs the functions as defined in ETSI TS 123 246 [i.1] and in addition provides capabilities that allow the features of the satellite-specific elements of the multicast services to be administered by the BMMF within the BMSC (not shown in these diagrams as it is a functional entity within the BMSC).

4.2 Protocol Architecture

The function of the satellite radio interface NAS Layer is to provide support to the IP User Plane Handler (UPH). The NAS Layer uses the services provided by the Adaptation Layer (AL). Figure 4.2 illustrates the position of the NAS Layer within the Family SL air interface protocol stack. An overview of the radio interface layering and relationship to the NAS Layer is provided in ETSI TS 102 744-3-7 [6], clause 4.1.

The present document defines the operation of the extension to the NAS Layer peer-to-peer interface (defined in ETSI TS 124 007 [1] and ETSI TS 124 008 [2]) between the RNC and the UE that is required in order to support the Family SL implementation of MBMS, as shown in Figure 4.2.

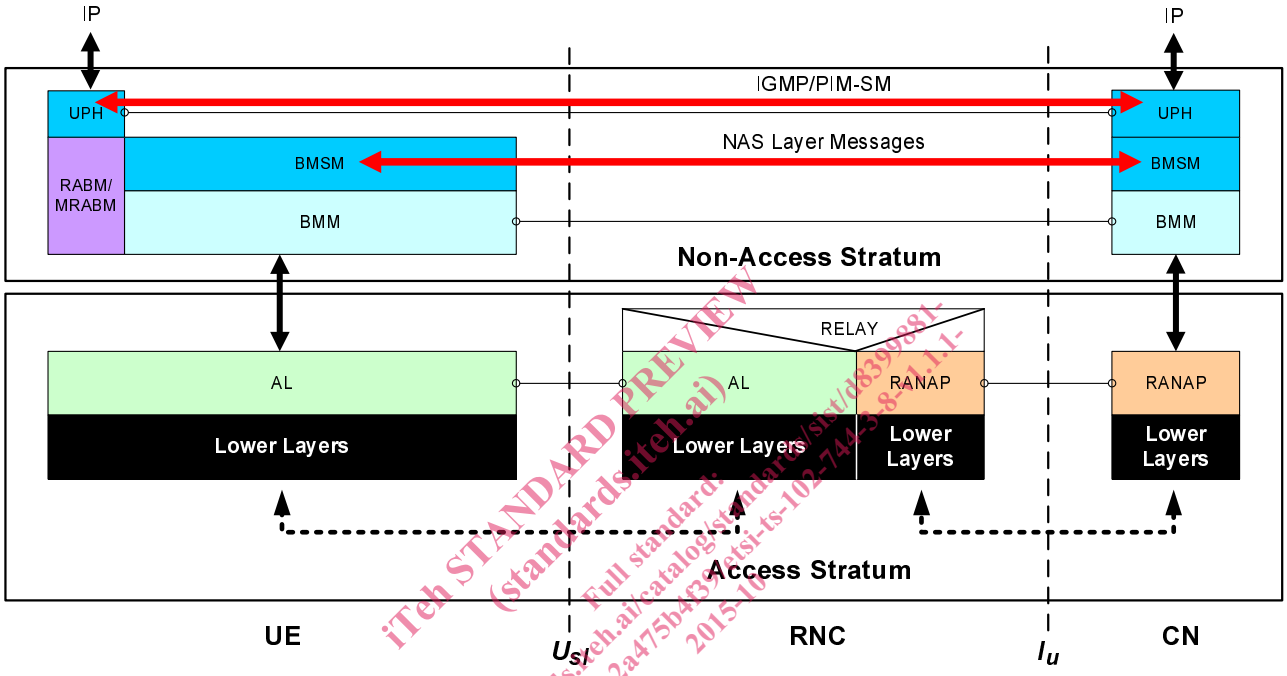

Figure 4.2: Satellite Network Higher Layers (NAS and IP)

iTeh STANDARD PREVIEW
(standards.iteh.ai)
Full standard:
https://standards.iteh.ai/catalog/standards/sist/d8399881-045d-4d2f-a379-2c2a475b4f39/etsi-ts-102-744-3-8-v1.1.1-2015-10

The NAS Layer is responsible for the following:

- Radio Access Bearer Management;
- MBMS Radio Access Bearer Management;
- Broadcast Multicast Mobility Management (BMM);
- Broadcast Multicast Session Management (BMSM).

Protocol entities in the BM domain of the NAS Layer use message transport services provided by the Adaptation Layer to communicate with their peers through a single Service Access Point (SAP):

- BMMAL-SAP: BMM to Adaptation Layer Service Access Point Broadcast Multicast (BM) domain.

This SAP inherits functionality from the GMMAL-SAP described in detail in ETSI TS 102 744-3-6 [5].

The NAS Layer functionality described in the present document constitutes an extension to the 3GPP Session Management behaviour, with the full functionality of the Session Management entity and these extensions being implemented in the BMSM entity. In addition, extensions to the User Plane Handler to support interpretation of IP multicast related signalling protocols are described in the present document.

5 MBMS NAS Layer Operations

5.1 MBMS Mobility Management procedures

5.1.1 GPRS Attach to BM Domain

5.1.1.1 Successful GPRS Attach Procedure

The GPRS Mobility Management Procedures and Security Mode Procedures which operate towards the PS domain are utilized for the BM Domain. If a combined PS/CS Attach procedure is employed to minimize signalling across the radio interface, then the GMM signalling is directed to the PS domain and the mobility management state is locally transferred (within the UE protocol stack) to the BMM and MM entities for the BM and CS domain respectively; otherwise independent GPRS Attach procedures are applied for the PS and BM domains and a separate mobility management state is maintained in the BMM and GMM entities.

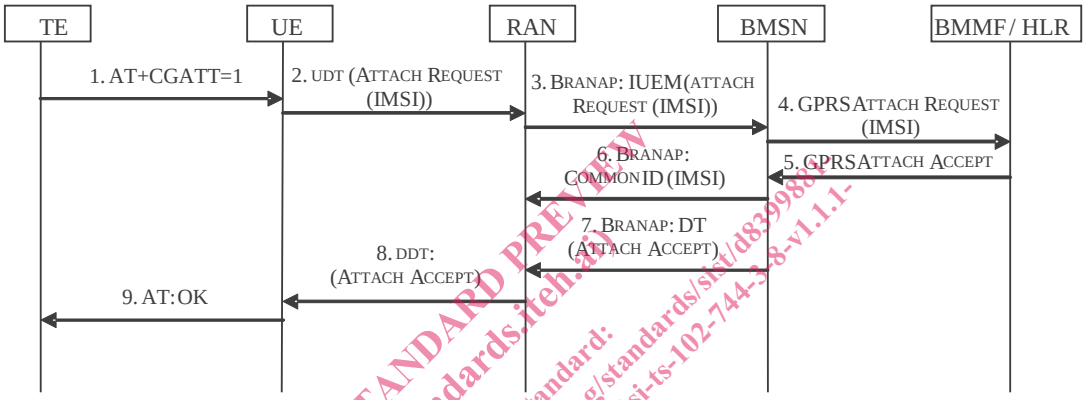

Figure 5.1: Successful GPRS Attach procedure towards the BM domain

iTeh STANDARD PREVIEW
(standards.iteh.ai)
Full standard:
https://standards.iteh.ai/catalog/standards/sist/d8399884-04f4-d2f-a7f7-2c2a775b4f50/etsi-ts-102-744-3-8-v1.1.1-2015-10

The procedure is illustrated in Figure 5.1 and described as follows:

1) The Attach Request procedure may be initiated by an external AT Command sent to the UE (or the UE may be configured internally to attach to the BM domain on power-up).

2) The UE initiates the GPRS Attach procedure by sending an Attach Request (IMSI) to the PS Domain of Core Network encapsulated in an UplinkDirectTransfer AL message.

3) The RAN creates an IuConnectionIdentifier handler for the UE and forwards the Attach Request (IMSI) message to the BMSN encapsulated in an Initial_UE_Message.

4) The BMSN creates a handler for this Iu signalling connection and associates it to the IMSI. It then creates and sends a GPRS Attach Request to the BMMF to verify if this IMSI is provisioned in the system (full Identity Check and Security Mode procedures may be applied at this stage).

5) If the IMSI is provisioned and allowed to access the BM domain then the BMMF sends a GPRS Attach Accept to the BMSN.

6) he BMSN creates a CommonID (IMSI) message and sends it to the RAN via the newly created Iu Signalling connection. This informs the RNC of the permanent NAS identity (IMSI) of a user and allows the RNC to create a reference between the IMSI and the UE Specific Signalling connection.

7) The BMSN sends a GPRS Attach Accept to the UE encapsulated in a Direct Transfer Iu message.

8) The RAN forwards the Attach Accepts message to the UE which updates its GMM state.

9) The initiator of the AT Command receives an OK in response to its initial command, acknowledging the successful completion of the procedure (if the command was initiated by the TE).

At the conclusion of the GPRS Attach and Security Mode Procedures, the signalling connection between the UE and the BM domain is available and secured for BM Session Management operation, as defined in clause 5.2.

5.1.1.2 Unsuccessful GPRS Attach Procedure

An unsuccessful GPRS Attach procedure may occur for a number of reasons, including:

1) The IMSI for the UE is not provisioned for operation with the BM domain;

2) Security mode procedures fail;

3) Communications within the Access Stratum are unreliable.

Until the GPRS Attach Procedure towards the BM succeeds (or a Combined Attach procedure succeeds), no further BMSM signalling can take place.

5.1.2 GPRS Detach

5.1.2.0 General

The GPRS Detach procedure may be initiated by either the User Equipment or the Core Network to remove the mobility management association between the UE and the CN.

5.1.2.1 CN-initiated GPRS Detach Request

If the UE was attached to multiple domains using a combined Attach procedure, a GPRS Detach procedure initiated by any of the Core Network domains will result in loss of connectivity between the UE and all Core Network Domains, including the BM Domain.

If the UE utilized a specific Attach procedure towards the BM domain, then the UE shall only modify the mobility management state held in the BMM entity in response to a GPRS Detach procedure initiated by the BM domain,

Upon reception of a GPRS Detach Request initiated by the BM Domain of the Core Network, the UE shall acknowledge the Detach Request to the BM Domain. All PDP Context information shall be implicitly deleted by both the UE and the CN, and all RABs shall be considered implicitly deleted by the UE. The CN shall issue an IuSignalling Connection Release Request, and all RABs shall be considered implicitly deleted by the RAN.

iTeh STANDARD PREVIEW
(standards.iteh.ai)
https://standards.iteh.ai/catalog/standards/sist/d8399d81-045d-4d2f-a879-2c2f75b45e9e/etsi-ts-102-744-3-8-v1.1.1-2015-10

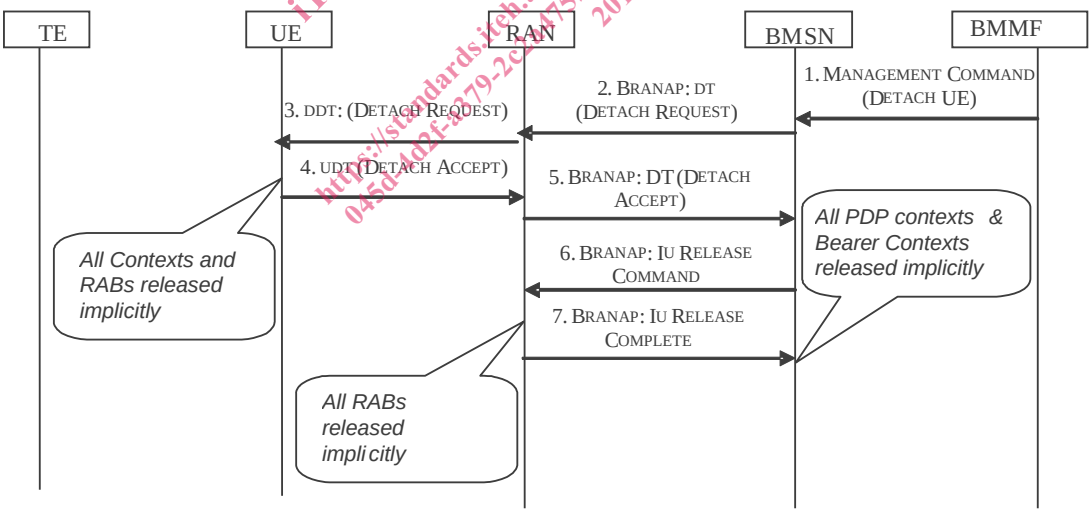

Figure 5.2: BM domain-initiated GPRS Detach Request

The procedure is illustrated in Figure 5.2 and described as follows:

1) A management entity, such as the BMMF issues a management command instructing the BMSN to detach an UE.

2) The BMSN initiates a Detach Request towards the UE.

3) Upon receipt of the Detach Request on the interface, the UE GMM enters into PMM-Detached state.

4) The UE deletes all connection state and responds to the BMSN by forwarding a Detach_Accept message via the RAN encapsulated in an Uplink Direct Transfer message.

5) The RAN sends this NAS message to the BMSN via the IuBM interface in a Direct Transfer Iu container.

6) The BMSN initiates an Iu Release Command to remove the UE-specific signalling connection between the RAN and the PS domain of the CN.

7) The RNC implicitly releases all RABs and completes the Iu Release command.

5.1.2.2 UE-initiated GPRS Detach Request

If the UE utilized a combined Attach procedure, then the Detach procedure will be directed to the PS domain.

If the UE utilized a specific Attach procedure to obtain access to the BM domain, then the UE shall initiate a specific GPRS Detach procedure towards the BM domain.

All connection states within the UE are deleted implicitly.

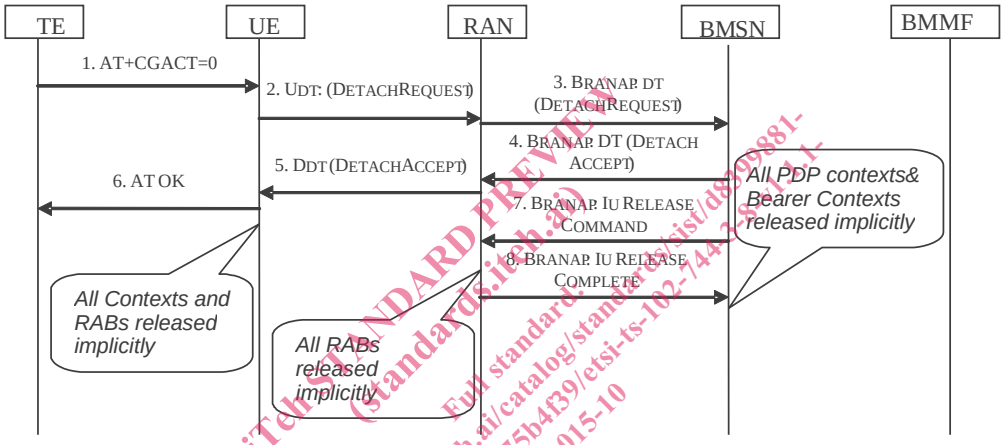

iTeh STANDARD PREVIEW
(standards.iteh.ai)
Full standard:
https://standards.iteh.ai/catalog/standards/sist/d8399881-0456-4d2f-8379-22a475b4f39/etsi-ts-102-744-3-8-v1.1.1-2015-10

Figure 5.3: UE-initiated GPRS Detach Procedure

The procedure is illustrated in Figure 5.3 and described as follows:

1) A trigger (AT command) requests the UE to detach from the Core Network.

2) The UE GMM entity enters in PMM-detached state and initiates a Detach Request towards the BMSN via the RAN in an Uplink Direct Transfer message on its UE signalling.

3) The RAN forwards the message to the Core Network via the IuBM interface in a Direct Transfer message.

4) Upon reception of the NAS message, the BMSN implicitly triggers the deactivation of its PDP Context and associated RAB. The BMSN responds to the UE by forwarding a Detach_Accept message to the RAN in a Downlink Direct Transfer message.

5) The RAN sends this NAS message to the UE via the UE-specific signalling interface. At this point, all RABs connections are released in the UE.

6) The UE signals the successful detach to the TE.

7) The BMSN initiates an Iu Release Command to remove the UE-specific signalling connection between the RAN and the PS domain of the CN.

8) The RNC completes the Iu Release command and implicitly deletes all RABs.