# SLOVENSKI STANDARD
# SIST EN 13230-3:2016

**01-julij-2016**

**Nadomešča:**

**SIST EN 13230-3:2009**

---

**Železniške naprave - Zgornji ustroj proge - Betonski pragi in kretniški betonski pragi - 3. del: Dvodelni armiranobetonski pragi**

Railway applications - Track - Concrete sleepers and bearers - Part 3: Twin-block reinforced sleepers

Bahnanwendungen - Oberbau - Gleis- und Weichenschwellen aus Beton - Teil 3: Bewehrte Zweiblockschwellen

Applications ferroviaires - Voie - Traverses et supports en béton - Partie 3 : Traverses biblocs en béton armé



**Ta slovenski standard je istoveten z: EN 13230-3:2016**

---

**ICS:**

| | | |
|---|---|---|
| 45.080 | Tračnice in železniški deli | Rails and railway components |
| 91.100.30 | Beton in betonski izdelki | Concrete and concrete products |

**SIST EN 13230-3:2016 en**

EUROPEAN STANDARD

NORME EUROPÉENNE

EUROPÄISCHE NORM

# EN 13230-3

May 2016

ICS 91.100.30; 93.100

Supersedes EN 13230-3:2009

English Version

# Railway applications - Track - Concrete sleepers and bearers - Part 3: Twin-block reinforced sleepers

Applications ferroviaires - Voie - Traverses et supports en béton - Partie 3 : Traverses biblocs en béton armé

Bahnanwendungen - Oberbau - Gleis- und Weichenschwellen aus Beton - Teil 3: Bewehrte Zweiblockschwellen

This European Standard was approved by CEN on 4 March 2016.

CEN members are bound to comply with the CEN/CENELEC Internal Regulations which stipulate the conditions for giving this European Standard the status of a national standard without any alteration. Up-to-date lists and bibliographical references concerning such national standards may be obtained on application to the CEN-CENELEC Management Centre or to any CEN member.

This European Standard exists in three official versions (English, French, German). A version in any other language made by translation under the responsibility of a CEN member into its own language and notified to the CEN-CENELEC Management Centre has the same status as the official versions.



CEN members are the national standards bodies of Austria, Belgium, Bulgaria, Croatia, Cyprus, Czech Republic, Denmark, Estonia, Finland, Former Yugoslav Republic of Macedonia, France, Germany, Greece, Hungary, Iceland, Ireland, Italy, Latvia, Lithuania, Luxembourg, Malta, Netherlands, Norway, Poland, Portugal, Romania, Slovakia, Slovenia, Spain, Sweden, Switzerland, Turkey and United Kingdom.



EUROPEAN COMMITTEE FOR STANDARDIZATION
COMITÉ EUROPÉEN DE NORMALISATION
EUROPÄISCHES KOMITEE FÜR NORMUNG

**CEN-CENELEC Management Centre: Avenue Marnix 17, B-1000 Brussels**

# Contents

Page

## European foreword

This document (EN 13230-3:2016) has been prepared by Technical Committee CEN/TC 256 "Railway applications", the secretariat of which is held by DIN.

This document supersedes EN 13230-3:2009.

This European Standard shall be given the status of a national standard, either by publication of an identical text or by endorsement, at the latest by November 2016, and conflicting national standards shall be withdrawn at the latest by November 2016.

This document has been prepared under a mandate given to CEN by the European Commission and the European Free Trade Association, and supports essential requirements of EU Directive 2008/57/EC.

For relationship with EU Directive 2008/57/EC, see informative Annex ZA, which is an integral part of this document.

This European Standard is one of the EN 13230 series "*Railway applications – Track – Concrete sleepers and bearers*", which consists of the following parts:

— Part 1: General requirements

— Part 2: Prestressed monoblock sleepers

— Part 3: Twin-block reinforced sleepers

— Part 4: Prestressed bearers for switches and crossings

— Part 5: Special elements

— Part 6: Design



There is a change in the wording of the documents of EN 13230 (series) "design bending moment" is replaced by "characteristic bending moment" and "test bending moment".

According to the CEN/CENELEC Internal Regulations, the national standards organisations of the following countries are bound to implement this European Standard: Austria, Belgium, Bulgaria, Croatia, Cyprus, Czech Republic, Denmark, Estonia, Finland, Former Yugoslav Republic of Macedonia, France, Germany, Greece, Hungary, Iceland, Ireland, Italy, Latvia, Lithuania, Luxembourg, Malta, Netherlands, Norway, Poland, Portugal, Romania, Slovakia, Slovenia, Spain, Sweden, Switzerland, Turkey and the United Kingdom.

# Introduction

This part of the EN 13230 series defines the specific requirements dedicated to twin-block reinforced sleepers.

These are additional requirements to EN 13230-1:2016 that are necessary to have a complete standard dealing with twin-block reinforced sleepers.

The document specifies the test arrangements and the test procedures to implement and also the corresponding acceptance criteria just as the design approval tests.

It also specifies the steel connecting bar characteristics and the design criteria for incorporating the steel connecting bar within the twin-block reinforced sleepers.

# 1 Scope

This part of the EN 13230 series defines technical criteria and control procedures for manufacturing and testing twin-block reinforced concrete sleepers.

# 2 Normative references

The following documents, in whole or in part, are normatively referenced in this document and are indispensable for its application. For dated references, only the edition cited applies. For undated references, the latest edition of the referenced document (including any amendments) applies.

EN 206, *Concrete - Specification, performance, production and conformity*

EN 13230-1:2016, *Railway applications – Track – Concrete sleepers and bearers – Part 1: General requirements*

prEN 13230-6:2015, *Railway applications – Track – Concrete sleepers and bearers – Part 6: Design*

EN ISO 6506-1, *Metallic materials - Brinell hardness test - Part 1: Test method (ISO 6506-1)*

EN ISO 6892-1, *Metallic materials - Tensile testing - Part 1: Method of test at room temperature (ISO 6892-1)*



# 3 Terms, definitions and symbols

## 3.1 Terms and definitions



For the purposes of this document, the terms and definitions given in EN 13230-1:2016 and the following apply.

**3.1.1**
**steel connecting bar**
steel profile which connects reinforced concrete blocks

## 3.2 Symbols

For the purposes of this document, the symbols listed in Table 1 apply.

**Table 1 — Symbols**

| Symbol | Description | Unit |
|---|---|---|
| $Fr_0$ | Positive initial reference test load for the rail seat section | kN |
| $Fr_{0n}$ | Negative initial reference test load at rail seat section | kN |
| $Fr_r$ | Positive test load which produces first crack formation at the bottom of the rail seat section | kN |
| $Fr_{rn}$ | Negative test load which produces first crack formation at the top of rail seat | kN |
| $Fr_{0,05}$ | Maximum test load for which a crack width of 0,05 mm at the bottom of the rail seat section persists after removal of the load | kN |
| $Fr_{0,05n}$ | Maximum test load for which a crack width of 0,05 mm at the top of rail seat section persists after removal of the load | kN |
| $Fr_{0,5}$ | Maximum test load for which a crack width of 0,5 mm at the bottom of the rail seat section persists after removal of the load | kN |
| $Fr_B$ | Maximum positive test load at the rail seat section which cannot be increased | kN |
| $Fr_{Bn}$ | Maximum negative test load on the top of rail seat section which cannot be increased | kN |
| $Fr_u$ | Lower test load for the rail seat section dynamic test; $Fr_u$ = 50 kN | kN |
| $L_p$ | Design distance between the centre line of the rail seat to the edge of the sleeper at the bottom | m |
| $L_r$ | Design distance between the articulated support centre lines for the test arrangement at the rail seat section | m |
| $M_{k,r,pos}$ | Positive characteristic bending moment at rail seat, (see prEN 13230–6:2015) | kNm |
| $k_{1s}$ | Static coefficient to be used for calculation of $Fr_{0,05}$ or $Fr_{0,05n}$ test load | - |
| $k_{2s}$ | Static coefficient to be used for calculation of $Fr_{0,5}$ or $Fr_B$ test load | - |
| $k_{1d}$ | Dynamic coefficient to be used for calculation of $Fr_{0,05}$ test load | - |
| $k_{2d}$ | Dynamic coefficient to be used for calculation of $Fr_{0,5}$ or $Fr_B$ test load | - |
| $he$ | Distance between bottom surface of the sleeper to steel connecting bar | m |

# 4 Product testing

## 4.1 Test arrangements

### 4.1.1 General

This section defines the testing regime and rules for acceptance of twin-block concrete sleepers.

The layouts of the test arrangements for the rail seat section tests are defined in this section.

### 4.1.2 Rail seat section

The arrangement for the rail seat positive load test is shown in Figure 1.

Steel connecting bar can be cut for tests.

The position of articulated supports ($L_r$) is defined in Table 2.

The load *Fr* is applied perpendicularly to the base of the sleeper.

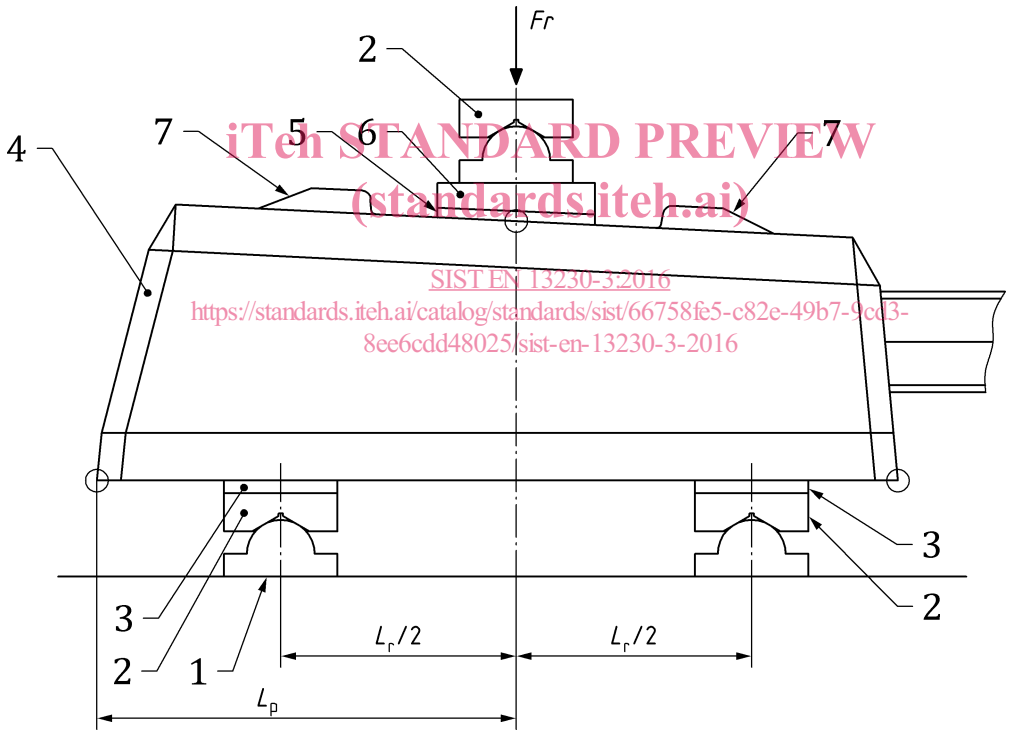




**Key**

1 rigid support
2 articulated support (see Annex A for details)
3 resilient pad (see Annex A for details)
4 reinforced concrete block
5 standard rail pad as defined by the purchaser
6 tapered packing (see Annex A for details)
7 lateral stop and base plate when used. To be agreed by the purchaser

**Figure 1 — Test arrangement at the rail seat section (positive bending moment)**

The test arrangement for the rail seat negative load test is shown in Figure 2, the value of $L_r$ in relation to $L_p$.is detailed in Table 2.

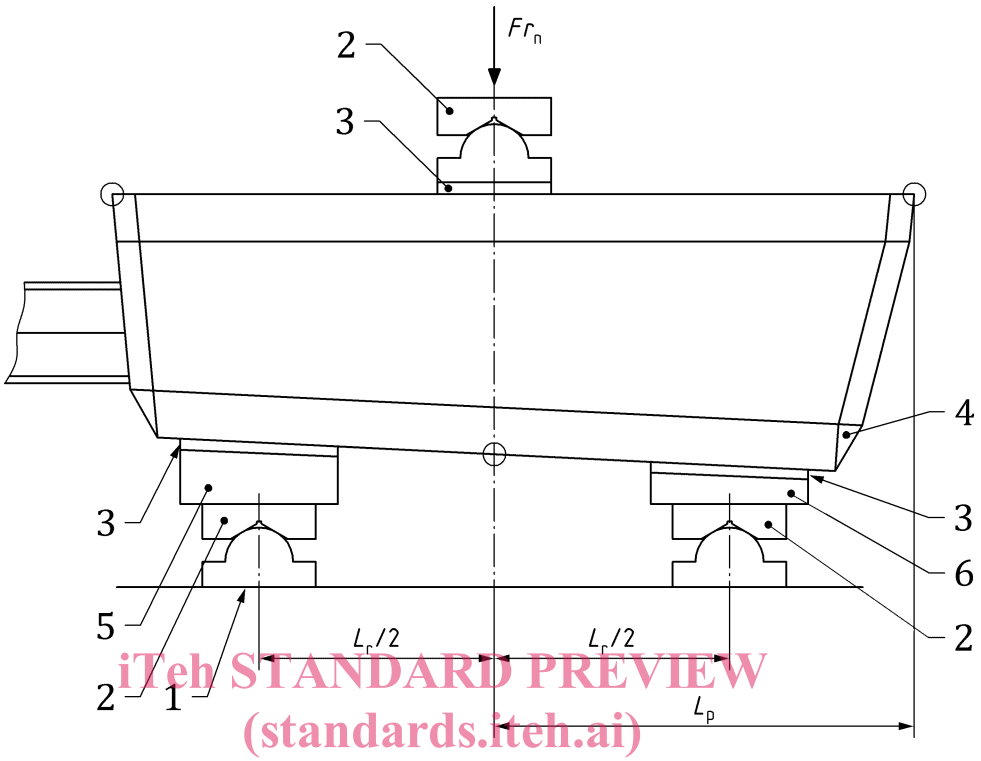




**Key**

1 rigid support
2 articulated support (see Annex A for details)
3 resilient pad (see Annex A for details)
4 reinforced concrete block
5 special tapered packing
6 special tapered packing



**Figure 2 — Test arrangement at the rail seat section (negative bending moment)**

**Table 2 — Value of $L_r$ in relation to $L_p$**

| $L_p$ in m | $L_r$ in m |
|---|---|
| $L_p < 0{,}349$ | 0,3 |
| $0{,}350 \leq L_p < 0{,}399$ | 0,4 |
| $0{,}400 \leq L_p < 0{,}449$ | 0,5 |
| $L_p \geq 0{,}450$ | 0,6 |

## 4.2 Test procedures

### 4.2.1 Test loads

$Fr_0$ is calculated from the geometry given in Figure 1 and values from Table 3 using Formula (1):

$$Fr_0 = \frac{4\,M_{\mathrm{k,r,pos}}}{L_{\mathrm{r}} - 0{,}1} \text{ in kN } Fr_{0\mathrm{n}} = ½ \cdot Fr_0 \tag{1}$$

**Table 3 — Value of $Fr_0$ in relation to $L_{\mathrm{r}}$**

| $L_{\mathrm{r}}$ in m | 0,4 | 0,5 | 0,6 |
|---|---|---|---|
| $Fr_0$ in kN | 13 $M_{\mathrm{k,r,pos}}$ | 10 $M_{\mathrm{k,r,pos}}$ | 8 $M_{\mathrm{k,r,pos}}$ |

### 4.2.2 Static test

The static test procedure at the rail seat section for design approval and routine tests is shown in Figures 3, 4 and 5.

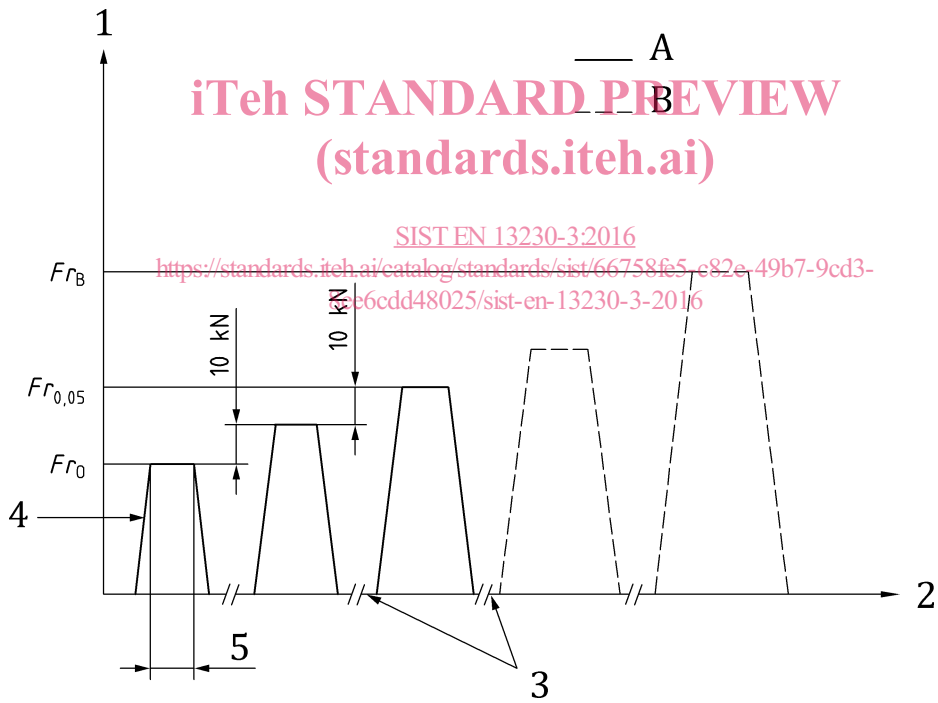




**Key**

1 load
2 time
3 crack checking (maximum duration 5 min)
4 120 kN/minute maximum
5 from 10 s minimum to 5 min maximum
A required part of test
B optional part of test

**Figure 3 — Static test procedure at the rail seat section for positive design approval test**