SLOVENSKI STANDARD
SIST EN 1610:2015

01-november-2015

Nadomešča:
SIST EN 1610:2001

Gradnja in preskušanje cevovodov za odvod odpadne vode in kanalizacijo

Construction and testing of drains and sewers

Einbau und Prüfung von Abwasserleitungen und -kanälen

Mise en oeuvre et essai des branchements et canalisations d'assainissement

Ta slovenski standard je istoveten z: EN 1610:2015

ICS:

23.040.01	Deli cevovodov in cevovodi na splošno	Pipeline components and pipelines in general
93.030	Zunanji sistemi za odpadno vodo	External sewage systems

SIST EN 1610:2015 **en**

EUROPEAN STANDARD

NORME EUROPÉENNE

EUROPÄISCHE NORM

EN 1610

September 2015

ICS 93.030

Supersedes EN 1610:1997

English Version

Construction and testing of drains and sewers

Mise en oeuvre et essai des branchements et canalisations d'assainissement

Einbau und Prüfung von Abwasserleitungen und -kanälen

This European Standard was approved by CEN on 24 July 2015.

CEN members are bound to comply with the CEN/CENELEC Internal Regulations which stipulate the conditions for giving this European Standard the status of a national standard without any alteration. Up-to-date lists and bibliographical references concerning such national standards may be obtained on application to the CEN-CENELEC Management Centre or to any CEN member.

This European Standard exists in three official versions (English, French, German). A version in any other language made by translation under the responsibility of a CEN member into its own language and notified to the CEN-CENELEC Management Centre has the same status as the official versions.

CEN members are the national standards bodies of Austria, Belgium, Bulgaria, Croatia, Cyprus, Czech Republic, Denmark, Estonia, Finland, Former Yugoslav Republic of Macedonia, France, Germany, Greece, Hungary, Iceland, Ireland, Italy, Latvia, Lithuania, Luxembourg, Malta, Netherlands, Norway, Poland, Portugal, Romania, Slovakia, Slovenia, Spain, Sweden, Switzerland, Turkey and United Kingdom.

EUROPEAN COMMITTEE FOR STANDARDIZATION
COMITÉ EUROPÉEN DE NORMALISATION
EUROPÄISCHES KOMITEE FÜR NORMUNG

CEN-CENELEC Management Centre: Avenue Marnix 17, B-1000 Brussels

Contents

Page

European foreword

This document (EN 1610:2015) has been prepared by Technical Committee CEN/TC 165 “Wastewater engineering”, the secretariat of which is held by DIN.

This European Standard shall be given the status of a national standard, either by publication of an identical text or by endorsement, at the latest by March 2016, and conflicting national standards shall be withdrawn at the latest by March 2016.

Attention is drawn to the possibility that some of the elements of this document may be the subject of patent rights. CEN [and/or CENELEC] shall not be held responsible for identifying any or all such patent rights.

This document supersedes EN 1610:1997.

The main changes with respect to the previous edition are listed below:

— updating of references and their associated requirements;

— addition of requirements for the soil-pipe-system.

According to the CEN-CENELEC Internal Regulations, the national standards organizations of the following countries are bound to implement this European Standard: Austria, Belgium, Bulgaria, Croatia, Cyprus, Czech Republic, Denmark, Estonia, Finland, Former Yugoslav Republic of Macedonia, France, Germany, Greece, Hungary, Iceland, Ireland, Italy, Latvia, Lithuania, Luxembourg, Malta, Netherlands, Norway, Poland, Portugal, Romania, Slovakia, Slovenia, Spain, Sweden, Switzerland, Turkey and the United Kingdom.

1 Scope

This European Standard is applicable to the construction and related testing of drains and sewers usually buried in the ground and usually operating under gravity but up to 0,5 kPa when surcharged.

The construction of pipelines operating under pressure is covered by this European Standard together with EN 805 as appropriate (e.g. for testing).

This European Standard is applicable to drains and sewers installed in trenches, under embankments or above ground. For trenchless construction EN 12889 applies. Additionally, other local or national regulations may apply, e.g. concerning health and safety, pavement reinstatement and requirements for tightness testing.

NOTE Further information is given by reference to national documents listed in Annex D.

2 Normative references

The following documents, in whole or in part, are normatively referenced in this document and are indispensable for its application. For dated references, only the edition cited applies. For undated references, the latest edition of the referenced document (including any amendments) applies.

EN 476:2011, *General requirements for components used in drains and sewers*

EN 752, *Drain and sewer systems outside buildings*

EN 805, *Water supply — Requirements for systems and components outside buildings*

EN 1295-1, *Structural design of buried pipelines under various conditions of loading — Part 1: General requirements*

3 Terms and definitions

For the purposes of this document, the following terms and definitions apply. The same definitions apply for trenches with vertical or sloping sides and for pipes laid below embankments. Some of these terms are illustrated in Figure 1.

3.1
bedding
part of the construction which supports the pipe between the trench bottom and the sidefill or initial backfill

Note 1 to entry: The bedding consists of upper and lower bedding. In the case of the pipe laid on natural trench bottom, the trench bottom is the lower bedding.

3.2
compaction layer thickness
thickness of each new layer of fill material prior to its compaction

3.3
depth of cover
vertical distance from the top of the pipe barrel to the surface

3.4
embedment
fill around the pipe including bedding, sidefill and initial backfill

3.5
initial backfill
layer of fill material immediately above the crown of the pipe

3.6
main backfill
fill between the top of the embedment and the level of the ground, top of embankment or, when applicable, the bottom of the road or railway construction

3.7
minimum trench width
minimum distance needed for safety and construction between the trench walls at the top of the lower bedding or when applicable between the trench support systems at any level

3.8
native soil
soil from the excavation of the trench

3.9
nominal size
DN
numerical designation of size of component, which is a convenient integer approximately equal to a manufacturing dimension in mm

Note 1 to entry: This may apply to either the internal diameter (DN/ID) or the external diameter (DN/OD).

[Source: EN 476:2011]

3.10
pipeline
assembly of pipes, fittings and joints between manholes or other structures

[SOURCE: EN 16323:2014, definition 2.2.3.6, modified]

3.11
prefabricated component
product manufactured separately from the installation process, generally in circumstances where a product standard applies and/or a manufacturer's quality control is in place

3.12
sidefill
material between bedding and initial backfill

3.13
trench depth
vertical distance from the bottom of the trench to the surface

3.14
minimum working space
***x*/2**
horizontal distance from the pipe outside wall to the side wall of the trench, or when applicable, between the trench support systems on the top of the lower bedding

Note 1 to entry: See Figure 2.

3.15
trench support system
construction to stabilize trench and to protect people in the trench

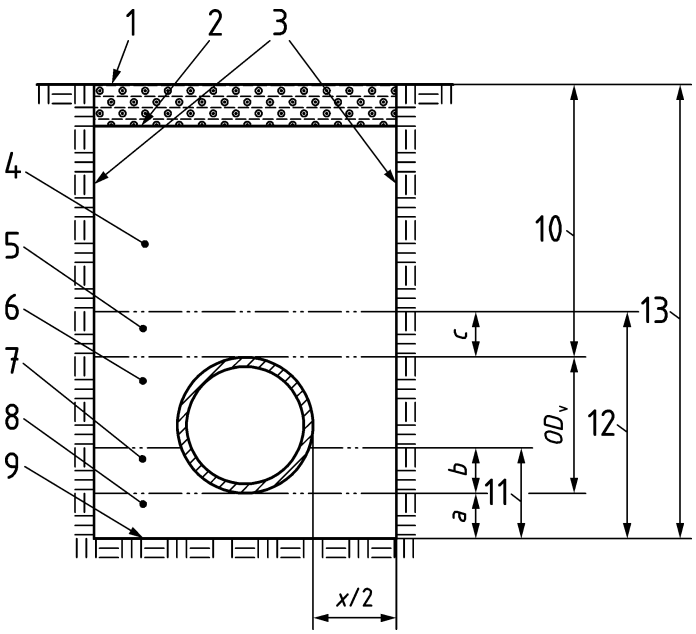

Key

1	surface	9	trench bottom
2	bottom of road or railway construction, if any	10	depth of cover (3.3)
3	trench walls	11	depth of bedding (3.1)
4	main backfill (3.6)	12	depth of embedment (3.4)
5	initial backfill (3.5)	13	trench depth (3.13)
6	sidefill (3.12)	a	thickness of lower bedding
7	upper bedding, *b*	b	thickness of upper bedding
8	lower bedding, *a*	c	thickness of initial backfill
		OD_V	is the vertical outside diameter

NOTE 1 For minimum values of a and c see Clause 7.

NOTE 2 The bedding angle is not the bedding reaction angle used in structural design.

Figure 1 — Illustration of definitions

4 General

4.1 Technical principles

Pipelines and manholes are engineering structures in which the combined performance of construction components, embedment, initial and main backfill and native soil constitute the basis for stability and safety in operation. The pipes, fittings and joint materials supplied, together with the work carried out at site, such as the pipe bedding, the jointing of pipes, the sidefilling and backfilling are all important factors in achieving a structure with adequate performance over the intended service life.

The network owner and the planner shall coordinate the extent and the requirements of the engineering services to be rendered for the individual case.

The pipeline shall be designed during planning in accordance with EN 1295-1 and EN 752 as applicable to ensure it is capable of carrying all foreseeable imposed and operational loads (including construction loads, that may be determinant for dimensioning) with a sufficient level of safety.

A procedure shall be established for the resolution of technical questions, agreement and recording of changes to design decisions made during construction.

4.2 Safeguarding design decisions

In the execution of the work it shall be ensured that the decisions made in the design are complied with or adapted to changed conditions.

The design decisions may be affected by variation of any of the following which should be checked during installation:

— trench width (see 6.3);

— trench depth;

— trench support system and the effect of its removal (see 11.5);

— degree of compaction of the embedment;

— degree of compaction of main backfill;

— pipe support and trench bottom conditions;

— construction traffic and assumptions concerning temporary loads;

— soil types (e.g. subsoil, trench walls, initial and main backfill);

— shape of trench (e.g. stepped trench, trench with sloping walls);

— ground and soil condition (e.g. affected by frost and thaw, rain, snow, flooding);

— ground water table;

— additional pipelines in the same trench;

— existing infrastructure (e.g. pipes, cables, structures);

— pipe type, strength or class.

NOTE The above list is not exhaustive.

4.3 Short sections of trench

Particular attention should be paid to:

— foundation conditions, construction steps and transition;

— shear load bearing capacity of the joints and bedding, e.g. meeting the hardening times in the case of concrete bedding;

— responding to soil changes in the trench bottom;

— securing of the initial and main backfill from the previous section;

— continuous measurement and adjustment of the laser setup, if required;

— adapting any dewatering.

5 Construction components and materials

5.1 General

Construction components and materials shall conform to national standards transposing European Standards as available, or to European technical approvals. In the absence of these, the components and materials shall comply with the requirements of the designer and EN 476.

All written instructions of the manufacturer shall be complied with.

5.2 Materials used for embedment

5.2.1 General

The materials used for embedment shall comply with the appropriate subclauses of 5.2 in order to be capable of providing permanent stability and load bearing capacity for the pipeline buried in the ground. Such materials shall not be detrimental to the pipe or pipe materials, manholes, the groundwater or soil.

Frozen materials shall not be used unless specific requirements are in place defining the conditions of use.

Materials used for embedment may be either native soil (see 5.2.2) if proved to be suitable or imported materials (see 5.2.3). Materials for bedding should contain no particles with sizes above

— 22 mm for DN ≤ 200;

— 40 mm for DN > 200 up to DN ≤ 600;

— 60 mm for DN > 600.

— For DN < 100 all written instructions of the manufacturer shall be complied with.

5.2.2 Native soil

Re-use of native soil shall meet all the following requirements:

— it is permitted by the works specification/design;

— it complies with any compactability requirements in the works specification/design;

— it is free from materials detrimental to the pipe (e.g. "oversized" particles, tree roots, waste, organic material, snow and ice) and any clay lumps larger than 75 mm.

Native soil meeting the requirements of 5.2.3.2 or 5.2.3.4 is considered suitable.

5.2.3 Imported materials

5.2.3.1 General

The following materials which may include recycled materials are suitable. Environmental consequences should be considered.

5.2.3.2 Granular materials

Granular materials include:

— single size granular material;

— graded granular material;

— sand;

— all-in aggregates;

— crushed aggregates.

5.2.3.3 Bonded materials

Bonded materials can include:

— soil cement;

— stabilized soil (e.g. with cement, calcium carbonate);

— light weight concrete;

— lean concrete;

— unreinforced concrete;

— reinforced concrete;

— self-compacting filling materials.

They shall be as specified in the design.

5.2.3.4 Other materials

Compactable materials other than those described in 5.2.3.2 to 5.2.3.3 may be used for embedment if their suitability as defined under 5.2.1 is proved. Natural or artificial substances which may cause damage to the pipeline and manholes are unsuitable.

When using industrially manufactured aggregates (e.g. moulding sand) and recycled construction materials, their environmental impact on pipeline construction and surrounding soil and water as well as their soil mechanical properties shall be considered by the designer.

Special attention shall be paid to the following:

— production/origin;

— treatment and storage;

— impact on groundwater and on soil;

— impact on components;

— volume stability;

— leaching;