SLOVENSKI STANDARD
SIST EN 12859:2011

01-junij-2011

Nadomešča:
SIST EN 12859:2008

Mavčni bloki - Definicije, zahteve in preskusne metode

Gypsum blocks - Definitions, requirements and test methods

Gips-Wandbauplatten - Begriffe, Anforderungen und Prüfverfahren

iTeh STANDARD PREVIEW
(standards.iteh.ai)

Carreaux de plâtre - Définitions, spécifications et méthodes d'essai

Ta slovenski standard je istoveten z: EN 12859:2011

SIST EN 12859:2011
https://standards.iteh.ai/catalog/standards/sist/6f8d33b9-8ac4-4647-8892-8a5b1d71a15e/sist-en-12859-2011

ICS:

01.040.91	Gradbeni materiali in gradnja (Slovarji)	Construction materials and building (Vocabularies)
91.100.10	Cement. Mavec. Apno. Malta	Cement. Gypsum. Lime. Mortar

SIST EN 12859:2011 **en,fr,de**

2003-01.Slovenski inštitut za standardizacijo. Razmnoževanje celote ali delov tega standarda ni dovoljeno.

SIST EN 12859:2011

iTeh STANDARD PREVIEW
(standards.iteh.ai)

SIST EN 12859:2011
https://standards.iteh.ai/catalog/standards/sist/6f8d33b9-8ac4-4647-8892-8a5b1d71a15e/sist-en-12859-2011

SIST EN 12859:2011

EUROPEAN STANDARD

NORME EUROPÉENNE

EUROPÄISCHE NORM

EN 12859

February 2011

ICS 91.100.10

Supersedes EN 12859:2008

English Version

Gypsum blocks - Definitions, requirements and test methods

Carreaux de plâtre - Définitions, spécifications et méthodes d'essai

Gips-Wandbauplatten - Begriffe, Anforderungen und Prüfverfahren

This European Standard was approved by CEN on 2 January 2011.

CEN members are bound to comply with the CEN/CENELEC Internal Regulations which stipulate the conditions for giving this European Standard the status of a national standard without any alteration. Up-to-date lists and bibliographical references concerning such national standards may be obtained on application to the CEN-CENELEC Management Centre or to any CEN member.

This European Standard exists in three official versions (English, French, German). A version in any other language made by translation under the responsibility of a CEN member into its own language and notified to the CEN-CENELEC Management Centre has the same status as the official versions.

CEN members are the national standards bodies of Austria, Belgium, Bulgaria, Croatia, Cyprus, Czech Republic, Denmark, Estonia, Finland, France, Germany, Greece, Hungary, Iceland, Ireland, Italy, Latvia, Lithuania, Luxembourg, Malta, Netherlands, Norway, Poland, Portugal, Romania, Slovakia, Slovenia, Spain, Sweden, Switzerland and United Kingdom.

iTeh STANDARD PREVIEW
(standards.iteh.ai)

SIST EN 12859:2011
https://standards.iteh.ai/catalog/standards/sist/6f8d33b9-8ac4-4647-8892-8a5b1d71a15e/sist-en-12859-2011

EUROPEAN COMMITTEE FOR STANDARDIZATION
COMITÉ EUROPÉEN DE NORMALISATION
EUROPÄISCHES KOMITEE FÜR NORMUNG

Management Centre: Avenue Marnix 17, B-1000 Brussels

© 2011 CEN All rights of exploitation in any form and by any means reserved worldwide for CEN national Members.

Ref. No. EN 12859:2011: E

SIST EN 12859:2011

Contents

Page

iTeh STANDARD PREVIEW
(standards.iteh.ai)
SIST EN 12859:2011
https://standards.iteh.ai/catalog/standards/sist/6f8d33b9-8ac4-4647-8892-8a5b1d71a15e/sist-en-12859-2011

SIST EN 12859:2011

iTeh STANDARD PREVIEW
(standards.iteh.ai)
SIST EN 12859:2011
https://standards.iteh.ai/catalog/standards/sist/618d3369-8ac4-4647-8892-6ffd71a15e/sist-en-12859-2011

SIST EN 12859:2011

Foreword

This document (EN 12859:2011) has been prepared by Technical Committee CEN/TC 241 “Gypsum and gypsum based products”, the secretariat of which is held by AFNOR.

This European Standard shall be given the status of a national standard, either by publication of an identical text or by endorsement, at the latest by August 2011, and conflicting national standards shall be withdrawn at the latest by August 2011.

Attention is drawn to the possibility that some of the elements of this document may be the subject of patent rights. CEN [and/or CENELEC] shall not be held responsible for identifying any or all such patent rights.

This document supersedes EN 12859:2008.

This document has been prepared under a mandate given to CEN by the European Commission and the European Free Trade Association, and supports essential requirements of EU Directive(s).

For relationship with EU Directive(s), see informative Annex ZA, which is an integral part of this document.

This European Standard includes:

iTeh STANDARD PREVIEW
(standards.iteh.ai)

— A normative annex concerning sampling for independent test;

— An informative annex recommending requirements and test method for measuring surface hardness.

SIST EN 12859:2011
https://standards.iteh.ai/catalog/standards/sist/6f8433b9-8ac4-4b4a-8892-8a5b1d21a15e/sist-en-12859-2011

According to the CEN/CENELEC Internal Regulations, the national standards organizations of the following countries are bound to implement this European Standard: Austria, Belgium, Bulgaria, Croatia, Cyprus, Czech Republic, Denmark, Estonia, Finland, France, Germany, Greece, Hungary, Iceland, Ireland, Italy, Latvia, Lithuania, Luxembourg, Malta, Netherlands, Norway, Poland, Portugal, Romania, Slovakia, Slovenia, Spain, Sweden, Switzerland and United Kingdom.

SIST EN 12859:2011

Introduction

Diagram 1 shows the relationship between this standard and the package of standards prepared to support the family of gypsum products.

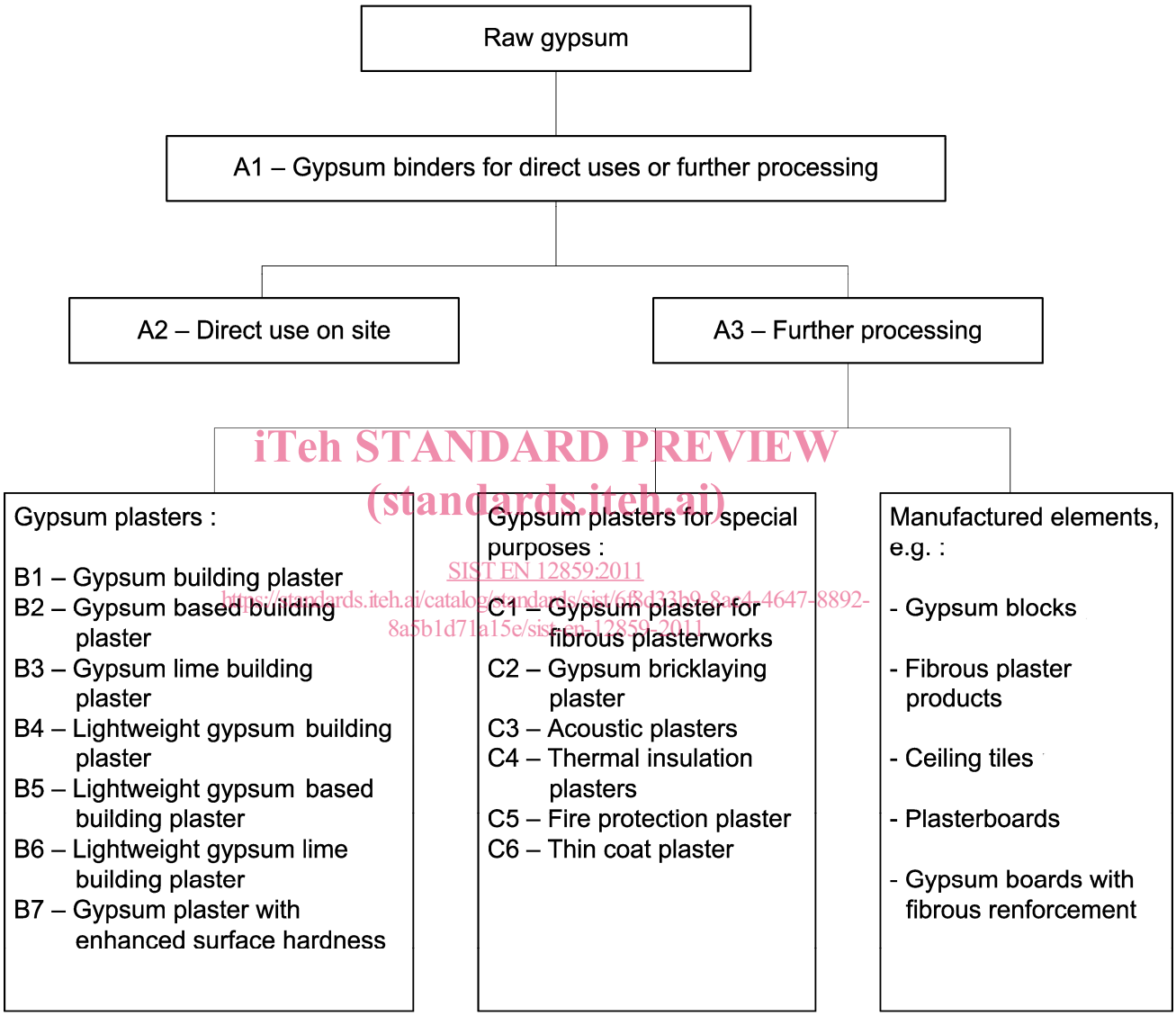

iTeh STANDARD PREVIEW
(standards.iteh.ai)
SIST EN 12859:2011
https://standards.iteh.ai/catalog/standards/sist/6f8d33b9-8ac4-4647-8892-8a5b1d71a15e/sist-en-12859-2011

Figure 1 — Family of gypsum binders and gypsum products

SIST EN 12859:2011

1 Scope

This European Standard specifies the characteristics and performance of gypsum blocks with smooth faces for which the main intended uses are construction of non-load bearing partitions or independent wall linings and the fire protection of columns, lift shafts, shafts for services, etc. Gypsum blocks are not used to build ceilings.

It covers the following performance characteristics related to the essential requirements:

— reaction to fire;

— resistance to fire;

— direct airborne sound insulation;

— release of dangerous substances;

to be measured according to the corresponding European test methods, as well as:

— thermal resistance

to be calculated from the thermal conductivity values given in 4.3.2.

It describes the reference tests for technical specifications.

iTeh STANDARD PREVIEW
(standards.iteh.ai)

This European Standard covers also additional technical characteristics that are of importance for the use and acceptance of the product by the construction industry:

— convenience classes for density;

SIST EN 12859:2011
https://standards.iteh.ai/catalog/standards/sist/6f8d33b9-8ac4-4647-8892-8a5b1d71a15e/sist-en-12859-2011

— convenience classes for pH.

It provides for the evaluation of conformity of the product to this European Standard.

This European Standard does not cover gypsum blocks of thickness less than 50 mm or gypsum storey height units.

2 Normative references

The following referenced documents are indispensable for the application of this document. For dated references, only the edition cited applies. For undated references, the latest edition of the referenced document (including any amendments) applies.

EN 13501-1, *Fire classification of construction products and building elements — Part 1: Classification using data from reaction to fire tests*

EN 13501-2, *Fire classification of construction products and building elements — Part 2: Classification using data from fire resistance tests, excluding ventilation services*

EN ISO 717-1, *Acoustics — Rating of sound insulation in buildings and of building elements — Part 1: Airborne sound insulation (ISO 717-1:1996)*[1)]

---

1) This reference is impacted by the stand-alone amendment EN ISO 717-1:1996/A1:2006.

SIST EN 12859:2011

EN ISO 6946:2007, *Building components and building elements — Thermal resistance and thermal transmittance — Calculation method (ISO 6946:2007)*

EN ISO 10140-3, *Acoustics — Laboratory measurement of sound insulation of building elements — Part 3: Measurement of impact sound insulation (ISO 10140-3:2010)*

EN ISO 10456:2007, *Building materials and products — Hygrothermal properties — Tabulated design values and procedures for determining declared and design thermal values (ISO 10456:2007)*

3 Terms, definitions and symbols

3.1 Terms and definitions

For the purposes of this document, the following terms and definitions apply.

3.1.1
gypsum block
factory-made building element that is produced from calcium sulphate and water, that may incorporate fibres, fillers, aggregates and other additives as far as they are not classified as dangerous substances in accordance with European regulations, and that may be coloured by pigmentation in accordance with the provisions of this standard

NOTE The gypsum block is a rectangular parallelepiped with tongues and grooves on at least two of their opposite edges.

iTeh STANDARD PREVIEW
(standards.iteh.ai)

3.1.2
solid gypsum block
gypsum block manufactured without cavities

SIST EN 12859:2011
https://standards.iteh.ai/catalog/standards/sist/6f8d33b9-8ac4-4647-8892-8a5b1d71a15e/sist-en-12859-2011

3.1.3
cavity gypsum block
gypsum block which incorporates preformed cavities

3.1.4
preformed cavity
formed cavity parallel to the faces which may or may not pass completely through the block and which may run parallel with the height or the length

NOTE See example on Figure 2.

3.1.5
face
plain and smooth surface intended to provide the finish of a partition

NOTE See Figure 2.

3.1.6
edge
extreme side of the gypsum block having tongues and grooves

NOTE See Figure 2.

3.1.7
thickness
distance between the two faces of a gypsum block

NOTE See Figure 2.

SIST EN 12859:2011

3.1.8
length
greatest distance between two edges of a gypsum block

NOTE See Figure 2.

3.1.9
height
smaller distance between two edges of a gypsum block

NOTE See Figure 2.

iTeh STANDARD PREVIEW
(standards.iteh.ai)

SIST EN 12859:2011
https://standards.iteh.ai/catalog/standards/sist/6f8d33b9-8ac4-4647-8892-8a5b1d71a15e/sist-en-12859-2011

SIST EN 12859:2011

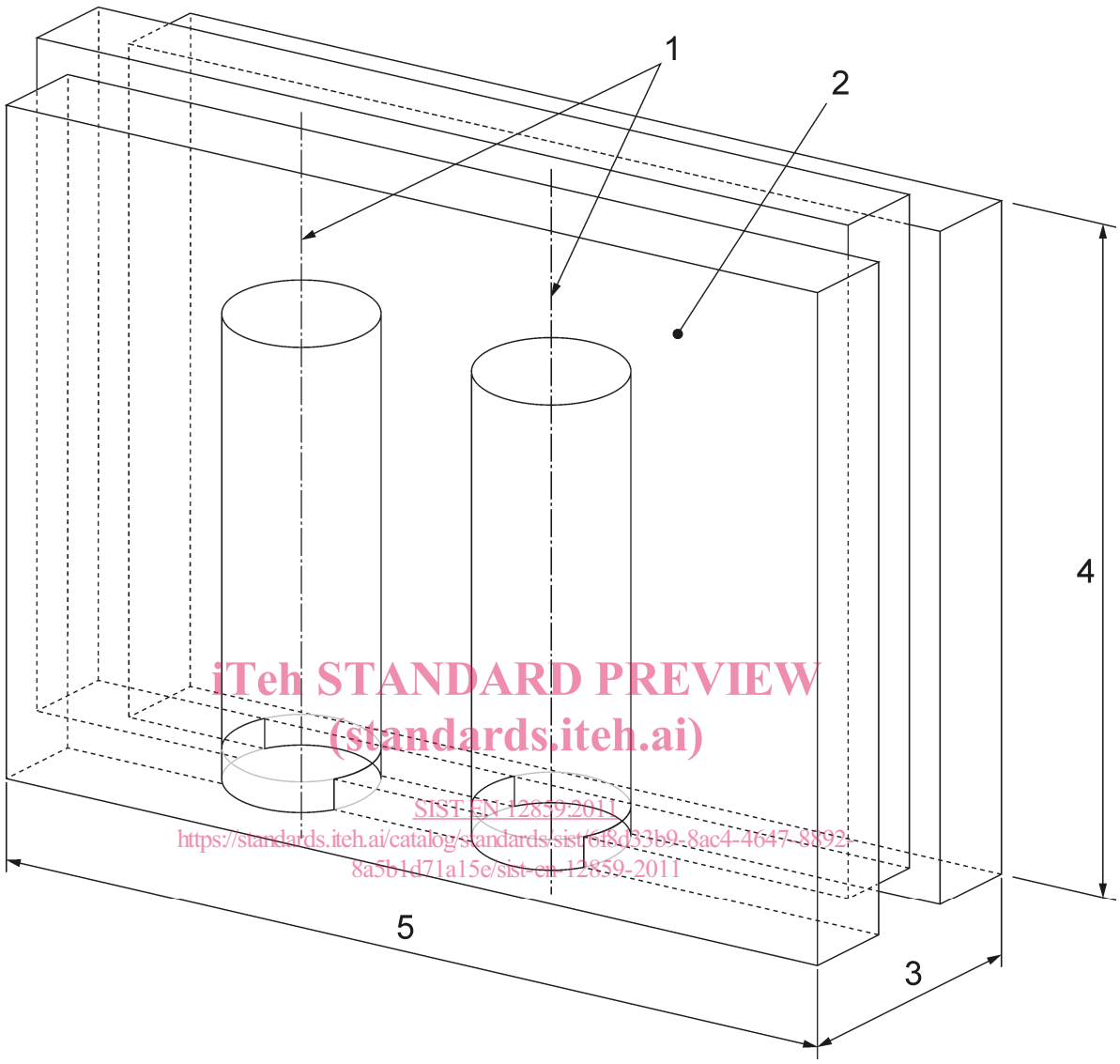

iTeh STANDARD PREVIEW
(standards.iteh.ai)
SIST EN 12859:2011
https://standards.iteh.ai/catalog/standards/sist/648d33b9-8ac4-4647-8892-8a5b1d71a15e/sist-en-12859-2011

Key

1 Preformed cavities
2 Face
3 Thickness
4 Height
5 Length

Figure 2 — Gypsum block

3.2 Symbols

For the purposes of this document, the following symbols apply:

ρ gross dry density, in kilograms per cubic metre (kg/m^3)

λ thermal conductivity, in Watts per metre per Kelvin (W/m·K)

SIST EN 12859:2011

$\lambda_{23\text{-}50}$ thermal conductivity of the hardened plaster when in equilibrium at 23 °C and 50 % relative humidity, in Watts per metre per Kelvin (W/m·K)

M mass of the gypsum block in kilograms (kg)

R2F reaction to fire

FR fire resistance

R direct airborne sound insulation

4 Requirements

4.1 Fire behaviour

4.1.1 Reaction to fire

Gypsum blocks are classified in Euroclass A.1 (no contribution to fire) without testing when they contain less than 1 % by weight or volume (whichever is the more onerous) of organic material.

Gypsum blocks with 1 % or more, by weight or volume of organic material, shall be tested and classified in accordance with EN 13501-1.

4.1.2 Fire resistance

iTeh STANDARD PREVIEW
(standards.iteh.ai)

Resistance to fire is a property of an assembled system and not of the product itself.

When relevant, the fire resistance of a system including gypsum blocks assembled with adhesive for gypsum blocks shall be determined and classified in accordance with EN 13501-2.

SIST EN 12859:2011
https://standards.iteh.ai/catalog/standards/sist/6f6d5569-8ac4-4647-8892-8a5b1d71a15e/sist-en-12859-2011

4.2 Direct airborne sound insulation

Direct airborne sound insulation is a property of an assembled system and not of the product itself.

When relevant, the direct airborne sound insulation of a system including gypsum blocks assembled with adhesive for gypsum blocks shall be determined in accordance with EN ISO 10140-3 and EN ISO 717-1.

4.3 Thermal properties

4.3.1 Thermal resistance

When the intended use of gypsum blocks is to contribute to thermal resistance in building construction works, the thermal resistance is calculated using the formula given in EN ISO 6946:2007.

The values of thermal conductivity necessary for this calculation are given in 4.3.2 and thickness values to be used shall be measured according to 5.3.1.

4.3.2 Thermal conductivity

Design values of the thermal conductivity of hardened gypsum plaster used in the manufacture of gypsum blocks are given in Table 1.