SLOVENSKI STANDARD
SIST EN 4673-006:2010

01-november-2010

Aeronavtika - Vložki, navoj UNJ, samozapiralni, s samozagozdnim ključem - 006. del: Iz toplotnoodpornega jekla FE-PA2601 (A286), mazani z MoS2

Aerospace series - Inserts, UNJ threads, self-locking, with self-broaching keys - Part 006: In heat resisting steel FE-PA2601 (A286), MoS2 coated

Luft- und Raumfahrt - Gewindeeinsätze, UNJ-Gewinden, selbstsichernd, mit selbsträumenden Stiften - Teil 006: Mit selbsträumenden Stiften, aus hochwarmfestem Stahl FE-PA2601 (A286), MoS2 beschichtet

Série aérospatiale - Douilles filetées, à filetage UNJ, à freinage interne, à clavettes auto-brochantes - Partie 006 : En acier résistant à chaud FE-PA2601 (A286), revêtues MoS2

Ta slovenski standard je istoveten z: EN 4673-006:2010

ICS:

49.030.30 Matice Nuts

SIST EN 4673-006:2010 **en,fr,de**

EUROPEAN STANDARD

NORME EUROPÉENNE

EUROPÄISCHE NORM

EN 4673-006

August 2010

ICS 49.030.30

English Version

Aerospace series - Inserts, UNJ threads, self-locking, with self-broaching keys - Part 006: In heat resisting steel FE-PA2601 (A286), MoS^2 coated

Série aérospatiale - Douilles filetées, à filetage UNJ, à freinage interne, à clavettes auto-brochantes - Partie 006: En acier résistant à chaud FE-PA2601 (A286), revêtues MoS^2

Luft- und Raumfahrt - Gewindeeinsätze, UNJ-Gewinden, selbstsichernd, mit selbsträumenden Stiften - Teil 006: Mit selbsträumenden Stiften, aus hochwarmfestem Stahl FE-PA2601 (A286), MoS^2 beschichtet

This European Standard was approved by CEN on 12 June 2010.

CEN members are bound to comply with the CEN/CENELEC Internal Regulations which stipulate the conditions for giving this European Standard the status of a national standard without any alteration. Up-to-date lists and bibliographical references concerning such national standards may be obtained on application to the CEN Management Centre or to any CEN member.

This European Standard exists in three official versions (English, French, German). A version in any other language made by translation under the responsibility of a CEN member into its own language and notified to the CEN Management Centre has the same status as the official versions.

CEN members are the national standards bodies of Austria, Belgium, Bulgaria, Croatia, Cyprus, Czech Republic, Denmark, Estonia, Finland, France, Germany, Greece, Hungary, Iceland, Ireland, Italy, Latvia, Lithuania, Luxembourg, Malta, Netherlands, Norway, Poland, Portugal, Romania, Slovakia, Slovenia, Spain, Sweden, Switzerland and United Kingdom.

EUROPEAN COMMITTEE FOR STANDARDIZATION
COMITÉ EUROPÉEN DE NORMALISATION
EUROPÄISCHES KOMITEE FÜR NORMUNG

Management Centre: Avenue Marnix 17, B-1000 Brussels

Ref. No. EN 4673-006:2010: E

Contents

Page

Foreword

This document (EN 4673-006:2010) has been prepared by the Aerospace and Defence Industries Association of Europe - Standardization (ASD-STAN).

After enquiries and votes carried out in accordance with the rules of this Association, this Standard has received the approval of the National Associations and the Official Services of the member countries of ASD, prior to its presentation to CEN.

This European Standard shall be given the status of a national standard, either by publication of an identical text or by endorsement, at the latest by February 2011, and conflicting national standards shall be withdrawn at the latest by February 2011.

Attention is drawn to the possibility that some of the elements of this document may be the subject of patent rights. CEN [and/or CENELEC] shall not be held responsible for identifying any or all such patent rights.

According to the CEN/CENELEC Internal Regulations, the national standards organizations of the following countries are bound to implement this European Standard: Austria, Belgium, Bulgaria, Croatia, Cyprus, Czech Republic, Denmark, Estonia, Finland, France, Germany, Greece, Hungary, Iceland, Ireland, Italy, Latvia, Lithuania, Luxembourg, Malta, Netherlands, Norway, Poland, Portugal, Romania, Slovakia, Slovenia, Spain, Sweden, Switzerland and the United Kingdom.

Introduction

For design and installation procedures, see EN 4673-002 and EN 4673-001.

1 Scope

This European Standard specifies the characteristics of self-locking, inserts for Inch series, self-broaching keys, in FE-PA2601, MoS_2 coated, for aerospace applications.

Classification: 900 MPa [1] / 315 °C [2]

2 Normative references

The following referenced documents are indispensable for the application of this document. For dated references, only the edition cited applies. For undated references, the latest edition of the referenced document (including any amendments) applies.

EN 2399, *Aerospace series — Heat resisting steel FE-PA2601 (X4NiCrTiMoV26-15) — $R_m \geq 900$ MPa — Bars for forged bolts — D ≤ 25 mm*

EN 2424, *Aerospace series — Marking of aerospace products*

EN 2491, *Aerospace series — Molybdenum disulphide dry lubricants — Coating methods*

EN 3639, *Aerospace series — Heat resisting alloy FE-PA2601 — Softened and cold worked — Wire for forged fasteners — D ≤ 15 mm — 900 MPa ≤ R_m ≤ 1100 MPa* [3]

EN 4673-001, *Aerospace series — Inserts, UNJ threads, self-locking, with self-broaching keys — Part 001: Installation and removal procedure*

EN 4673-002, *Aerospace series — Inserts, UNJ threads, self-locking, with self-broaching keys — Part 002: Design standard*

EN 4673-003, *Aerospace series — Inserts, UNJ threads, self-locking, with self-broaching keys — Part 003: Technical specification*

ISO 3161, *UNJ threads — general requirements and limit dimensions*

TR 3198, *Aerospace series — Manufacturers' identification monograms and marks for EN aerospace products* [4]

3 Required characteristics

3.1 Configuration – Dimensions – Tolerances – Masses

See Figure 1 and Tables 1, 2, 3 and 4.

---

1) Corresponds to the minimum tensile stress which the material is able to withstand at ambient temperature.

2) Maximum temperature that the insert is able to withstand, without permanent alteration to its original characteristics, after ambient temperature has been restored. The maximum temperature is conditioned by the MoS_2 lubricant.

3) Published as ASD-STAN Prestandard at the date of publication of this standard by Aerospace and Defence Industries Association of Europe-Standardization (ASD-STAN), (www.asd-stan.org).

4) Published as ASD-STAN Technical Report at the date of publication of this standard by Aerospace and Defence Industries Association of Europe-Standardization (ASD-STAN), (www.asd-stan.org).

Dimensions and tolerances are in millimetres. They apply before MoS_2 coating.

3.2 Material

Insert: EN 3639 and EN 2399 treated for 370 HV to 435 HV.

Keys: Stainless steel or nickel alloy treated for HV > 600.

3.3 Surface treatment

See EN 2491.

4 Insert definition

See Figure 1.

R_a 3,2 [R_a 1,6 only for key grooves and keys]

Values apply before MoS_2 coating.

Remove sharp edges 0,1 mm to 0,4 mm.

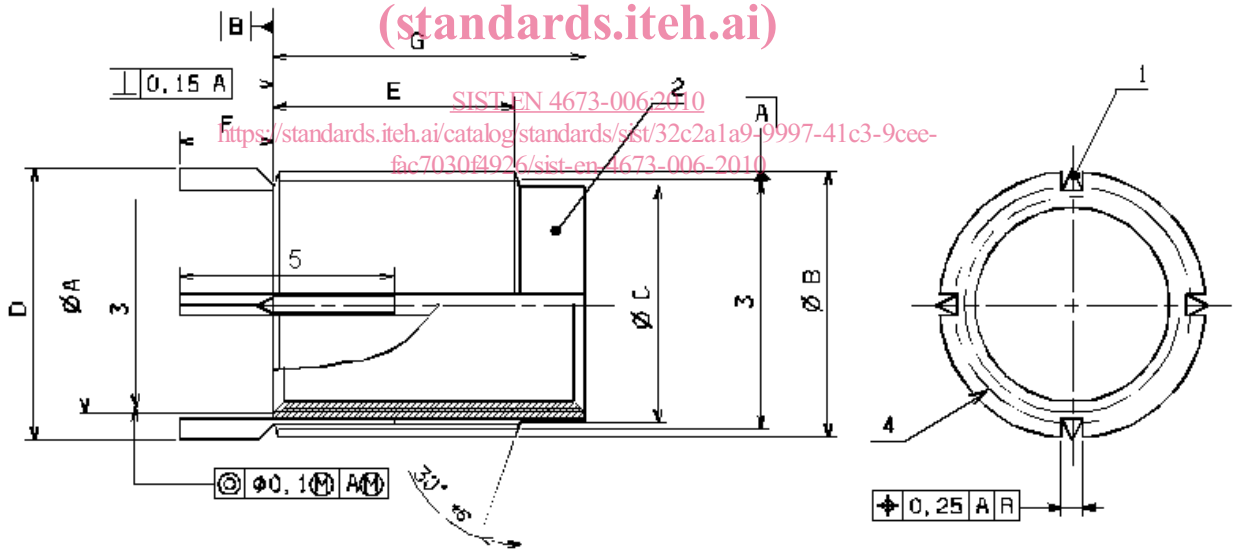

Key

1 N keys equally spaced.
2 Form out-of-round in this area to achieve the self-locking requirement. Mark of tools allowed.
3 Pitch diameters.
4 Marking area or on keys left to producer's option.
5 Total length of the key shall not exceed E min. Dimensions and location of keys shall meet EN 4673-003 requirements.

Details of form not stated are left to the producer's discretion.

Figure 1

4.1 Normal size insert

See Table 1.

Table 1

A Internal thread [a] Code	Designation	*B* External thread [b] Designation	*C* [c] max.	*D* 0 - 0,2	*E* max.	*F* 0 - 0,2	*G* max.	*N*	Mass kg/1 000 ≈
3-0	.190 0-32UNJF-3B	.312 5-18UNS-2A	6,30	7,9	6,0	4,35	7,7	2	1,4
4-0	.250 0-28UNJF-3B	.375 0-16UNS-2A	7,90	9,5	8,0		10,0	2	2,3
5-0	.312 5-24UNJF-3B	.437 5-16UNS-2A	9,50	11,1	9,5		12,3	2	3,6
6-0	.375 0-24UNJF-3B	.500 0-16UNS-2A	11,05	12,7	11,5		14,5	4	5,0
7-0	.437 5-20UNJF-3B	.562 5-16UNS-2A	12,65	14,2	13,5		17,1	4	7,1
8-0	.500 0-20UNJF-3B	.625 0-16UNS-2A	14,25	15,8	15,5		19,4	4	9,2

[a] In accordance with ISO 3161.

[b] See Table 4.

[c] After deformation.

4.2 First repair size insert

See Table 2.

Table 2

A Internal thread [a] Code	Designation	*B* External thread [b] Designation	*C* [c] max.	*D* 0 - 0,2	*E* max.	*F* 0 - 0,2	*G* max.	*N*	Mass kg/1 000 ≈
3-1	.190 0-32UNJF-3B	.375 0-16UNS-2A	7,90	9,5	6,0	4,35	7,7	2	2,5
4-1	.250 0-28UNJF-3B	.437 5-16UNS-2A	9,50	11,1	8,0		10,0	2	4,1
5-1	.312 5-24UNJF-3B	.500 0-16UNS-2A	11,05	12,7	9,5		12,3	2	6,2
6-1	.375 0-24UNJF-3B	.562 5-16UNS-2A	12,65	14,2	11,5		14,5	4	8,5
7-1	.437 5-20UNJF-3B	.625 0-16UNS-2A	14,25	15,8	13,5		17,1	4	11,8
8-1	.500 0-20UNJF-3B	.687 5-16UNS-2A	15,80	17,4	15,5		19,4	4	15,1

[a] In accordance with ISO 3161.

[b] See Table 4.

[c] After deformation.

4.3 Second repair size insert

See Table 3.

Table 3

A Internal thread [a] Code	*A* Internal thread [a] Designation	*B* External thread [b] Designation	*C* [c] max.	*D* 0 - 0,2	*E* max.	*F* 0 - 0,2	*G* max.	*N*	Mass kg/1 000 ≈
3-2	.190 0-32UNJF-3B	.437 5-16UNS-2A	9,50	11,1	6,0	4,35	7,7	2	3,9
4-2	.250 0-28UNJF-3B	.500 0-16UNS-2A	11,05	12,7	8,0		10,0	2	6,3
5-2	.312 5-24UNJF-3B	.562 5-16UNS-2A	12,65	14,2	9,5		12,3	2	9,2
6-2	.375 0-24UNJF-3B	.625 0-16UNS-2A	14,25	15,8	11,5		14,5	4	12,6
7-2	.437 5-20UNJF-3B	.687 5-16UNS-2A	15,80	17,4	13,5		17,1	4	17,1
8-2	.500 0-20UNJF-3B	.750 0-16UNS-2A	17,40	19,0	15,5		19,4	4	21,7

a In accordance with ISO 3161.
b See Table 4.
c After deformation.

4.4 External thread dimension

See Table 4.

Table 4

External thread Designation	Major diameter min.	Major diameter max.	Pitch diameter min.	Pitch diameter max.	Minor diameter min.	Minor diameter max.
.312 5-18UNS-2A	7,69	7,91	6,89	6,99	6,32	6,50
.375 0-16UNS-2A	9,25	9,49	8,35	8,46	7,92	8,13
.437 5-16UNS-2A	10,84	11,08	9,93	10,05	9,50	9,72
.500 0-16UNS-2A	12,43	12,67	11,51	11,63	11,09	11,30
.562 5-16UNS-2A	14,01	14,25	13,10	13,22	12,67	12,89
.625 0-16UNS-2A	15,60	15,84	14,69	14,81	14,26	14,48
.687 5-16UNS-2A	17,19	17,43	16,27	16,39	15,84	16,07
.750 0-16UNS-2A	18,77	19,01	17,85	17,98	17,42	17,65