INTERNATIONAL STANDARD

ISO 26

Third edition
1993-05-15

Cinematography — Projector usage of 16 mm motion-picture films for direct front projection — Specifications

iTeh STANDARD PREVIEW
(standards.iteh.ai)

Cinématographie — Utilisation du film 16 mm *dans le projecteur pour la projection frontale directe — Spécifications*

ISO 26:1993
https://standards.iteh.ai/catalog/standards/sist/bf8d5b47-f46c-4823-b2a0-86c912fc8d0a/iso-26-1993

Reference number
ISO 26:1993(E)

Foreword

ISO (the International Organization for Standardization) is a worldwide federation of national standards bodies (ISO member bodies). The work of preparing International Standards is normally carried out through ISO technical committees. Each member body interested in a subject for which a technical committee has been established has the right to be represented on that committee. International organizations, governmental and non-governmental, in liaison with ISO, also take part in the work. ISO collaborates closely with the International Electrotechnical Commission (IEC) on all matters of electrotechnical standardization.

Draft International Standards adopted by the technical committees are circulated to the member bodies for voting. Publication as an International Standard requires approval by at least 75 % of the member bodies casting a vote.

iTeh STANDARD PREVIEW
(standards.iteh.ai)

International Standard ISO 26 was prepared by Technical Committee ISO/TC 36, *Cinematography*.

ISO 26:1993
https://standards.iteh.ai/catalog/standards/sist/b18d5647-f46c-4823-b2a0-86c912fc8d0a/iso-26-1993

This third edition cancels and replaces the second edition (ISO 26:1985), of which it constitutes a technical revision.

Annex A of this International Standard is for information only.

© ISO 1993
All rights reserved. No part of this publication may be reproduced or utilized in any form or by any means, electronic or mechanical, including photocopying and microfilm, without permission in writing from the publisher.

International Organization for Standardization
Case Postale 56 • CH-1211 Genève 20 • Switzerland

Printed in Switzerland

Cinematography — Projector usage of 16 mm motion-picture films for direct front projection — Specifications

1 Scope

This International Standard specifies the emulsion orientation, the rate of projection, the position of the projected image area and the relationship between picture and sound in the projector, intended for direct front projection of 16 mm motion-picture films with photographic and magnetic sound records and 16 mm silent motion-picture films.

iTeh STANDARD PREVIEW
(standards.iteh.ai)
ISO 26:1993
https://standards.iteh.ai/catalog/standards/sist/bf8d5b47-f46c-4823-b2a0-
9b0712fc8d0a/iso-26-1993

2 Normative references

The following standards contain provisions which, through reference in this text, constitute provisions of this International Standard. At the time of publication, the editions indicated were valid. All standards are subject to revision, and parties to agreements based on this International Standard are encouraged to investigate the possibility of applying the most recent editions of the standards indicated below. Members of IEC and ISO maintain registers of currently valid International Standards.

ISO 490:—[1], *Cinematography — Magnetic stripes and magnetic recording head gaps for sound record on 16 mm motion-picture film perforated along one edge (Type 1) — Positions and width dimensions.*

ISO 4243:1979, *Cinematography — Picture image area and photographic sound record on 16 mm motion-picture release prints — Positions and dimensions.*

3 Emulsion orientation

For 16 mm film, the emulsion position is dependent on the process of preparation and either emulsion-to-light source or emulsion-to-objective lens orientation can be encountered. The actual emulsion position should be indicated by a clear statement or diagram on the leader and on the label of the film container as recommended in ISO 5768 and ISO 8400.

4 Rate of projection

The rate of projection shall be 18 frames per second ± 1 frame per second (preferred) or 16 frames per second $^{+2,0}_{-0,5}$ frames per second for silent motion-picture films and 24 frames per second ± 1 frame per second for sound motion-picture films.

NOTES

1 Silent projectors having manually adjustable speed should be capable of reaching projection rates of 16 and 18 frames per second.

2 When a sound film is used in television in areas where the mains electricity supply is a.c. at 50 Hz, a rate of projection of 25 frames per second applies.

5 Position of projected image area

The projected image area shall be located in the vertical direction so that the horizontal axis of the projected area passes through the middle of the distance between the film perforations, as shown in figure 1 (dimension *A*).

It is recommended that projectors be provided with a framing adjustment of 0,5 mm (0,020 in) minimum above and below the nominal position.

6 Relationship between picture and sound record in the projector

The sound record as located in the film path of the projector shall precede the centre of the corresponding picture by the distances specified in ISO 490 and ISO 4243.

1) To be published. (Revision of ISO 490:1978)

NOTES

3 Picture/sound displacement for prints with photographic sound is specified in ISO 4243 as 26 frames ± 1 frame, and preferably 26 frames ± 0,5 frame.

4 Picture/sound displacement for prints with magnetic sound is specified in ISO 490 as 28 frames ± 1 frame, and preferably 28 frames ± 0,5 frame.

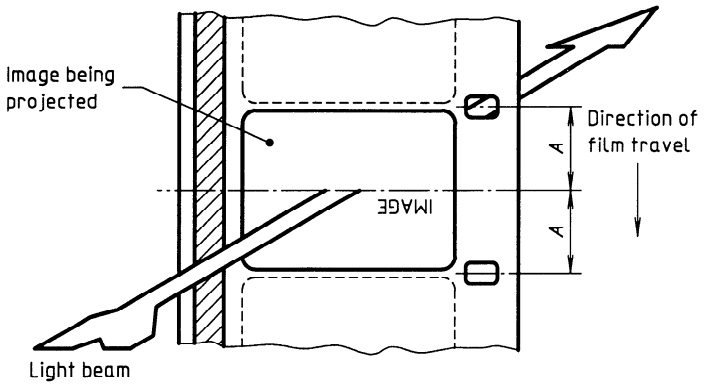

The film is shown as seen from the light source in the projector looking towards the projector lens.

Figure 1

iTeh STANDARD PREVIEW
(standards.iteh.ai)
ISO 26:1993
https://standards.iteh.ai/catalog/standards/sist/bf8d5b47-f46c-4823-b2a0-86c912fc8d0a/iso-26-1993

Annex A
(informative)

Applications

The rate of projection, 24 frames per second (see clause 4), is primarily intended for professional application of 16 mm sound motion-picture prints. For non-professional applications, films may be shot at the rate of 16 to 18 frames per second, magnetically striped and a magnetic sound record added.

iTeh STANDARD PREVIEW
(standards.iteh.ai)
ISO 26:1993
https://standards.iteh.ai/catalog/standards/sist/bf8d5b47-f46c-4823-b2a0-86c912fc8d0a/iso-26-1993

iTeh STANDARD PREVIEW
(standards.iteh.ai)
This page intentionally left blank
ISO 26:1993
https://standards.iteh.ai/catalog/standards/sist/bf8d5b47-f46c-4823-b2a0-86c912fc8d0a/iso-26-1993

iTeh STANDARD PREVIEW
(standards.iteh.ai)

This page intentionally left blank

ISO 26:1993
https://standards.iteh.ai/catalog/standards/sist/bf8d5b47-f46c-4823-b2a0-86c912fc8d0a/iso-26-1993

iTeh STANDARD PREVIEW
(standards.iteh.ai)

ISO 26:1993
https://standards.iteh.ai/catalog/standards/sist/bf8d5b47-f46c-4823-b2a0-86c912fc8d0a/iso-26-1993

UDC 771.531.352:778.55

Descriptors: cinematography, motion-picture film, motion-picture film 16 mm, projection, specifications.

Price based on 3 pages