SLOVENSKI STANDARD
SIST EN 13508-2:2003+A1:2011

01-september-2011

Ugotavljanje in ocenjevanje stanja drenažnih in kanalizacijskih sistemov zunaj stavb - 2. del: Sistem za vizualni nadzor in kodiranje

Investigation and assessment of drain and sewer systems outside buildings - Part 2: Visual inspection coding system

Untersuchung und Beurteilung Zustand von Entwässerungssystemen außerhalb von Gebäuden - Teil 2: Kodiersystem für die optische Inspektion

Investigation et évaluation des réseaux d'assainissement à l'extérieur des bâtiments - Partie 2: Système de codage de l'inspection visuelle

Ta slovenski standard je istoveten z: EN 13508-2:2003+A1:2011

ICS:

93.030	Zunanji sistemi za odpadno vodo	External sewage systems

SIST EN 13508-2:2003+A1:2011 en,de

EUROPEAN STANDARD

NORME EUROPÉENNE

EUROPÄISCHE NORM

EN 13508-2:2003+A1

May 2011

ICS 93.030

Supersedes EN 13508-2:2003

English Version

Investigation and assessment of drain and sewer systems outside buildings - Part 2: Visual inspection coding system

Investigation et évaluation des réseaux d'assainissement à l'extérieur des bâtiments - Partie 2: Système de codage de l'inspection visuelle

Untersuchung und Beurteilung Zustand von Entwässerungssystemen außerhalb von Gebäuden - Teil 2: Kodiersystem für die optische Inspektion

This European Standard was approved by CEN on 4 November 2002 and includes Corrigendum 1 issued by CEN on 21 March 2007 and Amendment 1 approved by CEN on 17 March 2011.

CEN members are bound to comply with the CEN/CENELEC Internal Regulations which stipulate the conditions for giving this European Standard the status of a national standard without any alteration. Up-to-date lists and bibliographical references concerning such national standards may be obtained on application to the CEN-CENELEC Management Centre or to any CEN member.

This European Standard exists in three official versions (English, French, German). A version in any other language made by translation under the responsibility of a CEN member into its own language and notified to the CEN-CENELEC Management Centre has the same status as the official versions.

CEN members are the national standards bodies of Austria, Belgium, Bulgaria, Croatia, Cyprus, Czech Republic, Denmark, Estonia, Finland, France, Germany, Greece, Hungary, Iceland, Ireland, Italy, Latvia, Lithuania, Luxembourg, Malta, Netherlands, Norway, Poland, Portugal, Romania, Slovakia, Slovenia, Spain, Sweden, Switzerland and United Kingdom.

EUROPEAN COMMITTEE FOR STANDARDIZATION
COMITÉ EUROPÉEN DE NORMALISATION
EUROPÄISCHES KOMITEE FÜR NORMUNG

Management Centre: Avenue Marnix 17, B-1000 Brussels

Ref. No. EN 13508-2:2003+A1:2011: E

Contents

Page

Foreword 5

Introduction 6

1 Scope 6

2 Normative references 6

3 Terms and definitions 7

4 Sources of additional information 12

5 General 12
5.1 Purpose 12
5.2 Methods 12
5.3 The use of the coding system 13
5.4 National equivalent coding systems 13
5.5 Data transfer 13
5.6 Information to be supplied by the employing authority 13

6 Drains and sewers - Coding system 14

7 Drains and sewers - Header information 14
7.1 Requirements 14
7.2 Other header information 15

8 Drains and sewers - Codes 16
8.1 Introduction 16
8.1.1 General 16
8.1.2 Main code 20
8.1.3 Characterisation 20
8.1.4 Quantification 20
8.1.5 Circumferential location 20
8.1.6 Observation at joint 21
8.1.7 Longitudinal location 21
8.1.8 Photograph reference 22
8.1.9 Video location reference 22
8.1.10 Remarks 22
8.2 Codes relating to the fabric of the pipeline 23
8.3 Codes relating to the operation of the pipeline 29
8.4 Inventory codes 33
8.5 Other codes 37

9 Manholes and inspection chambers - Coding system 40

10 Manholes and inspection chambers - Header information 40
10.1 Requirements 40
10.2 Other header information 40

11 Manholes and inspection chambers - Codes 41
11.1 Introduction 41
11.1.1 General 41
11.1.2 Main code 46
11.1.3 Characterisation 46
11.1.4 Quantification 46
11.1.5 Circumferential location 46
11.1.6 Observation at joint 47
11.1.7 Descriptive location 47
11.1.8 Vertical location 48

11.1.9 Photograph reference 49
11.1.10 Video location reference 49
11.1.11 Remarks 49
11.2 Codes relating to the fabric of the manhole or inspection chamber 49
11.3 Codes relating to the operation of the manhole or inspection chamber 57
11.4 Inventory codes 59
11.5 Other codes 65

12 Documentation 67

Annex A (normative) National equivalent coding systems 68
A.1 Header information 68
A.2 Codes 68

Annex B (informative) Format for electronic transfer of coded data 69
B.1 Introduction 69
[A1] B.2 Character Separated format [A1] 69
B.2.1 General 69
B.2.2 File header information 69
B.2.3 Inspection header information 71
B.2.4 Inspection data 72
B.2.5 Examples 73
B.3 Extensible Mark-up Language Format 74
B.3.1 General 74
B.3.2 File header information 75
B.3.3 Inspection header information 75
B.3.4 Inspection data 75
B.3.5 Example 75

Annex C (informative) Recommended system for coding of header information for drains and sewers 79
C.1 Introduction 79
C.2 Location of the inspection 79
C.3 Inspection details 82
C.4 Pipeline details 86
C.5 Other information 89
C.6 Changes to header information 89
C.7 Other information required by the employing authority 91

Annex D (informative) Recommended system for coding of header information for manholes and inspection chambers 92
D.1 Introduction 92
D.2 Location of the inspection 92
D.3 Inspection details 94
D.4 Manhole or inspection chamber details 98
D.5 Other information 100
D.6 Changes to header information 101
D.7 Other information required by the employing authority 102

Annex E (informative) Sample coding sheet 103

Annex F (informative) Photographs illustrating the coding system for drains and sewers 105

Annex G (informative) Photographs illustrating the coding system for manholes and inspection chambers 134

Annex H (informative) Sources of additional information 145
H.1 International Standards 145
H.2 Austria 145
H.2.1 Austrian Water and Waste Management Association – Rules of Practice (ÖWAV - Österreichischer Wasser- und Abfallwirtschaftsverband - Regelblätter) 145
H.2.2 Other guidelines 145
H.3 Denmark 146
H.4 Finland 146
H.5 France 147
H.6 Germany 147
H.7 Italy 148
H.8 Netherlands 148

H.9 Norway 148
H.10 Sweden 148
H.11 Switzerland 148
H.12 United Kingdom 149

Foreword

This document (EN 13508-2:2003+A1:2011) has been prepared by Technical Committee CEN/TC 165 “Wastewater engineering”, the secretariat of which is held by DIN.

This European Standard shall be given the status of a national standard, either by publication of an identical text or by endorsement, at the latest by November 2011, and conflicting national standards shall be withdrawn at the latest by November 2011.

This document includes Corrigendum 1 issued by CEN on 21 March 2007 and Amendment 1 approved by CEN on 17 March 2011.

This document supersedes EN 13508-2:2003.

The start and finish of text introduced or altered by amendment is indicated in the text by tags ▌A1⟩ ⟨A1▐.

The modifications of the related CEN Corrigendum have been implemented at the appropriate places in the text and are indicated by the tags ▌AC⟩ ⟨AC▐.

The Standard series EN 13508 " Condition of drain and sewer systems outside buildings " contains the following parts

— Part 1: General requirements

— Part 2: Visual inspection coding system

Other parts, dealing with other methods of inspection, can be added later.

In drafting this part of this European Standard account has been taken of other available standards, in particular EN 752 “Drain and sewer systems outside buildings”

To allow for the alteration of existing data and coding system software in accordance with this standard and training of inspection personnel, a transition period is granted until (DAV + 36 month) for the withdrawal of conflicting national standards and the application of this standard.

Where there are existing inspection programmes to meet legal requirements commenced before the publication of this standard, it is permitted to complete such programmes using the original coding system.

According to the CEN/CENELEC Internal Regulations, the national standards organizations of the following countries are bound to implement this European Standard: Austria, Belgium, Bulgaria, Croatia, Cyprus, Czech Republic, Denmark, Estonia, Finland, France, Germany, Greece, Hungary, Iceland, Ireland, Italy, Latvia, Lithuania, Luxembourg, Malta, Netherlands, Norway, Poland, Portugal, Romania, Slovakia, Slovenia, Spain, Sweden, Switzerland and United Kingdom.

Introduction

In producing this draft standard, existing national coding systems have been reviewed. To preserve the link with existing data, TC165/WG22 has tried to ensure that there is an equivalent code, or combination of codes, for every observation recorded in an existing national system. [A1] This will allow existing data to be transferred to the new coding system. [A1]

At present the amount of detail recorded varies between countries. The choice of features to be recorded and the extent of detail to be included is left to the employing authority.

Before the standard can be fully applied, extensive retraining of operators and modification of software will be necessary.

1 Scope

[A1] This European Standard is applicable to the investigation and assessment of drain and sewer systems outside buildings. [A1]

[A1] It is applicable to drain and sewer systems, which operate essentially under gravity, from the point where the wastewater leaves a building or roof drainage system, or enters a road gully, to the point where it is discharged into a treatment works or receiving water. [A1] Drains and sewers below buildings are included provided that they do not form part of the drainage system of the building.

This part of the European Standard specifies a coding system for the description of the internal condition of drains, sewers, manholes and inspection chambers identified through visual inspection. Where appropriate, it can also be used for pressure and vacuum systems in accordance with the requirements of the employing authority. [A1] Visual inspection of drain and sewer systems can be carried out as part of the investigation in order to undertake the assessment. [A1]

This part of the European Standard does not generally specify requirements for carrying out inspections.

2 Normative references

[A1] The following referenced documents are indispensable for the application of this document. For dated references, only the edition cited applies. For undated references, the latest edition of the referenced document (including any amendments) applies. [A1]

EN 476:1997, *General requirements for components used in discharge pipes, drains and sewers for gravity systems*

[A1] EN 752:2008, *Drain and sewer systems outside buildings* [A1]

[A1] EN 1085:2007, *Wastewater treatment — Vocabulary* [A1]

ISO 8601, *Data elements and interchange formats — Information interchange — Representation of dates and times*

3 Terms and definitions

For the purposes of this European Standard, the following terms and definitions apply:

NOTE These definitions are general terms. Other specific terms are defined in the text.

3.1
adjusting construction
[A1] part of a manhole or inspection chamber between the cover and frame and either the shaft or the cover slab. This is used to adjust the level of the cover and frame to accord with the required surface level [A1]

3.2
backdrop manhole
manhole with a connection, by means of a vertical pipe, at or just above invert, from a drain or sewer at a higher level
[A1] [EN 752:2008, Term 3.5] [A1]

3.3
benching
near horizontal surface adjacent to the channel in a manhole or inspection chamber, or a large sewer

3.4
chamber
part of a manhole or inspection chamber providing working space above the channel

3.5
chamber unit
component part of a manhole or inspection chamber manufactured as a single entity and intended to be joined with other chamber units

3.6
combined system
[A1] drain and sewer system designed to carry both foul wastewater and surface water in the same pipeline(s) [A1]
[A1] [EN 752:2008, Term 3.12, EN 1085:2007, Term 2110] [A1]

3.7
connection
general term used for the location at which one pipeline joins another pipeline or a manhole or inspection chamber

3.8
drain
pipeline, usually underground, designed to carry wastewater and/or surface water from a source to a sewer.
[A1] [EN 752:2008, Term 3.19, EN 1085:2007, Term 2250] [A1]

3.9
drain system
network of pipelines and ancillary works that conveys wastewater and/or surface water to a cesspool, sewer system or other place of disposal
[A1] *deleted text* [A1]

3.10
employing authority
organisation which owns or is responsible for the [A1] management [A1] of a drain or sewer system

3.11
exfiltration
[A1] escape of wastewater from a drain or sewer system into surrounding ground [A1]
[A1] [EN 752:2008, Term 3.24, EN 1085:2007, Term 2230] [A1]

3.12
gradient
ratio between the vertical and the horizontal projections of a pipe length
[A1] *deleted text* [A1]

3.13
gravity system
[A1] drain or sewer system where flow is caused by the force of gravity and where the pipeline is designed usually to operate partially full [A1]
[A1] [EN 752:2008, Term 3.30, EN 1085:2007, Term 2260] [A1]

3.14
groundwater
water present in the sub-surface strata
[A1] *deleted text* [A1]

3.15
infiltration
[A1] <into the drain and sewer system> unwanted flow resulting from an ingress of groundwater into a drain or sewer system [A1]
[A1] [EN 752:2008, Term 3.33, EN 1085:2007, Term 2220] [A1]

3.16
inspection chamber
[A1] chamber with a removable cover constructed on a drain or sewer that permits the introduction of cleaning and inspection equipment from surface level, but does not provide access for personnel [A1]
[A1] [EN 752:2008, Term 3.34] [A1]

3.17
invert
lowest point of the internal surface of the barrel of a pipe or channel at any cross section
[EN 476:1997]

3.18
joint
location at which the ends of two adjacent pipe units are joined together longitudinally

3.19
junction
connection made using a prefabricated junction pipe unit

3.20
landing
intermediate rest platform used to limit the height of a run of steps in a manhole

3.21
manhole
chamber with a removable cover constructed on a drain or sewer to permit entry by personnel
[A1] [EN 752:2008, Term 3.41] [A1]

3.22
node
manhole, inspection chamber, outfall, rodding eye or other significant intermediate point

3.23
outfall
[A1] structure or point from which wastewater is discharged to a wastewater treatment plant or receiving water [A1]
[A1] [EN 752:2008, Term 3.42, EN 1085:2007, Term 1280] [A1]

3.24
pipe unit
component part of a drain or sewer manufactured as a single entity and intended to be joined with other pipe units

3.25
pipeline
assembly of pipes, fittings, masonry and insitu concrete units and joints between manholes or other structures.

3.26
pipeline length
continuous section of drain or sewer between two adjacent nodes

3.27
pipe unit length
length of a manufactured pipe unit used in the construction of a pipeline

3.28
ramp manhole
manhole with a steeply inclined pipe or channel from a drain or sewer at a higher level
[A1] [EN 752:2008, Term 3.47] [A1]

3.29
receiving water
[A1] any type of water body where water or wastewater is discharged [A1]
[A1] [EN 752:2008, Term 3.49, EN 1085:2007, Term 1100] [A1]

3.30
rehabilitation
[A1] measures for restoring or upgrading the performance of existing drain and sewer systems [A1]
[A1] [EN 752:2008, Term 3.50] [A1]

3.31
repair
rectification of local damage
[A1] [EN 752:2008, Term 3.53] [A1]

3.32
rising main
[A1] pipe through which wastewater is pumped [A1]
[A1] [EN 752:2008, Term 3.56, EN 1085:2007, Term 2170] [A1]

[A1] *deleted text* [A1]

[A1] **3.33** [A1]
sewer
[A1] pipeline or other construction, usually underground, designed to carry wastewater from more than one source [A1]
[A1] [EN 752:2008, Term 3.65, EN 1085:2007, Term 2270] [A1]

[A1] **3.34** [A1]
sewer system
[A1] network of pipelines and ancillary works which conveys wastewater from drains to a treatment works or other place of disposal [A1]
[A1] [EN 752:2008, Term 3.66, EN 1085:2007, Term 2180] [A1]

[A1] **3.35** [A1]
shaft
upper part of a manhole or inspection chamber between the adjusting construction and the chamber

[A1] **3.36** [A1]
surface water
water from precipitation, which has not seeped into the ground and which is discharged to the drain or sewer system directly from the ground or from exterior building surfaces
[A1] [EN 752:2008, Term 3.73, EN 1085:2007, Term 2070] [A1]

[A1⟩ 3.37 ⟨A1]
taper
part of manhole or inspection chamber where the cross sectional area changes gradually

[A1⟩ 3.38 ⟨A1]
wastewater
[A1⟩ water composed of any combination of water discharged from domestic, industrial or commercial premises, surface run-off and accidentally any sewer infiltration water ⟨A1]
[A1⟩ [EN 752:2008, Term 3.80, EN 1085:2007, Term 1010] ⟨A1]

A1

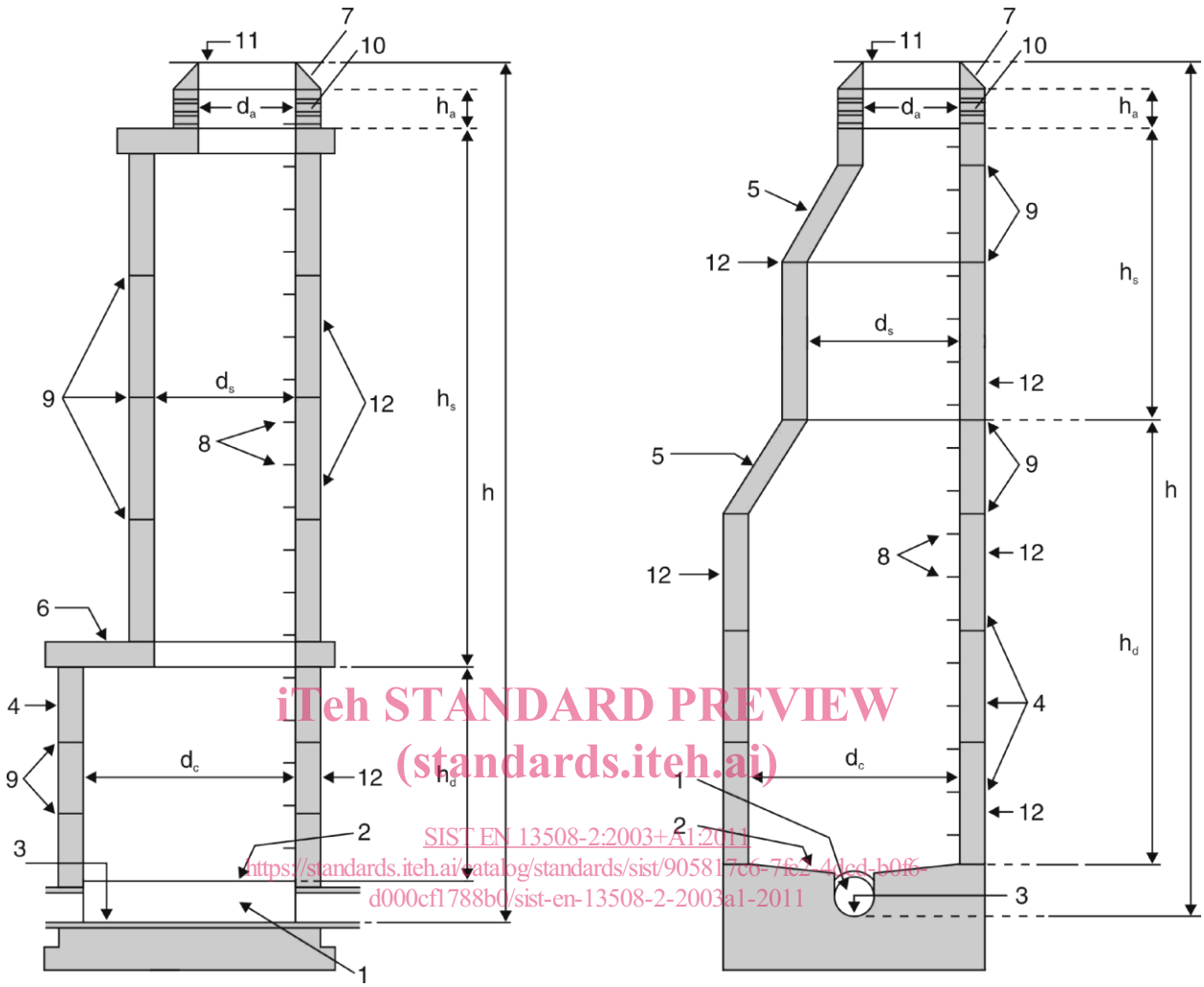

Key

1	channel	7	manhole top (cover and frame)	h	depth to invert
2	benching	8	step	h_a	depth of adjusting construction
3	invert	9	sealing material	h_s	depth of shaft
4	chamber unit	10	adjusting construction	h_d	depth of chamber
5	taper	11	cover level	d_a	access diameter/size
6	reducing slab	12	manhole wall	d_s	shaft diameter/size
				d_c	chamber diameter/size A1

Figure 1 — Illustration of terms relating to manholes

4 Sources of additional information

This standard specifies a coding system for visual inspection of drain and sewer systems. For further guidance on the execution of visual inspection in various countries reference should be made to national documents until such time as fully comprehensive European Standards are available.

The documents listed in annex H contain details, which can be used in the framework of this part.

5 General

5.1 Purpose

A1 EN 752 requires the use of a uniform standard coding system complying with this European Standard to ensure that results from visual inspections can be compared. This part of this standard specifies a system, which can be used to objectively record the visual information from the inspection. It does not include methods for assessing the condition of the drain or sewer as this requires subjective judgements and the use of additional information.

The coded information can be used for one or more of the following purposes:

— to assess the performance deficiencies as part of the development of a rehabilitation plan (see EN 752:2008, Clause 6);

— to provide information for use in the planning of maintenance activities, e.g. sewer cleaning programmes (see EN 752:2008, Clause 6);

— to investigate specific maintenance or operational problems (see EN 752:2008, Clause 11);

— the recording of inventory data (see EN 752:2008, Clause 6). A1

5.2 Methods

The visual inspection can be carried out in one of the following ways:

— inspection of the pipeline from within the pipeline;

— inspection of the pipeline from within the manhole or inspection chamber;

— inspection of the manhole or inspection chamber from within the manhole or inspection chamber;

— inspection of the manhole or inspection chamber from the surface.

Several inspection techniques can be used such as:

— remotely controlled CCTV camera;

— man entry;

— mirrors;

— photographic camera.

The personnel involved in inspection work shall be adequately trained in the inspection methods and in the coding system.

The inspection shall be carried out sufficiently slowly to enable all features to be observed. Where a closed circuit television camera is used, the camera should only be moved along the pipe when the lens is pointing forward in the direction of the axis of the sewer.

[A1] The relevant authority can prescribe requirements regarding the health, safety and welfare of the public and/or personnel. The work should be carried out in accordance with EN 752:2008, Clause 7 and Annex D. [A1]

5.3 The use of the coding system

The coding system specified in this European Standard for drains and sewers is described in clauses 6, 7 and 8. The coding system specified in this European Standard for manholes and inspection chambers is described in clauses 9, 10 and 11. Colour photographs showing examples of some observations are included to illustrate the use of the coding systems (see annex F and annex G).

Each observation is described by a main code comprising three letters and additional information. The first letter of the main code describes the application of the code (i.e. to a pipeline see clause 6 or to a manhole or inspection chamber see clause 10). The second letter indicates the type of code (see 8.1.2 and 11.1.2). The third letter determines the specific observation (see 8.1.3 and 11.1.3).

Where different observation types occur at the same point then each defect or feature shall be coded separately.

The defects, features and the general condition shall be coded in accordance with this standard and should be supported either with photographs or by a video recording.

5.4 National equivalent coding systems

The codes used in this standard are independent of any language. In order to make the codes more memorable or more compatible with existing systems, a list of national equivalent codes may be produced. Where these are produced, a table of equivalence should be included in a national annex to this standard. Only the language independent codes specified in this standard can be used with the electronic data transfer format described in annex B.

Rules for national equivalent coding systems are given in annex A.

5.5 Data transfer

The coded information is frequently transferred between databases. A recommended format for data transfer, using this coding system, is included in annex B.

5.6 Information to be supplied by the employing authority

The coding systems are intended to provide a comprehensive choice of codes to allow the inspector to describe the drains, sewers, manholes or inspection chambers as required by the employing authority. The codes are only to be used as directed by the employing authority who may decide which features are to be recorded.

The employing authority should specify the following from the options available in this standard:

a) Header information

   i) The coding system to be used for recording header information (e.g. national equivalent system or annex C or D)

   ii) Which of the optional header information items is to be recorded (see 7.2 and 10.2)

   iii) The reference points to be used for the longitudinal location in inspections of drains and sewers (see 8.1.7) and the vertical and circumferential location in manholes and inspection chambers (see 11.1.5 and 11.1.8).

b) The information about the individual observations.

   i) Whether the coding system to be used is the system described in clause 8 or clause 11 of this standard or a specified national equivalent system in accordance with 5.4.