SLOVENSKI STANDARD
SIST EN 12390-1:2013

01-februar-2013

Nadomešča:

SIST EN 12390-1:2001

SIST EN 12390-1:2001/AC:2004

Preskušanje strjenega betona - 1. del: Oblika, mere in druge zahteve za vzorce in kalupe

Testing hardened concrete - Part 1: Shape, dimensions and other requirements for specimens and moulds

Prüfung von Festbeton - Teil 1: Form, Maße und andere Anforderungen für Probekörper und Formen

Essai pour béton durci - Partie 1 : Forme, dimensions et autres exigences aux éprouvettes et aux moules

Ta slovenski standard je istoveten z: **EN 12390-1:2012**

ICS:

91.100.30	Beton in betonski izdelki	Concrete and concrete products

SIST EN 12390-1:2013 **en,fr,de**

EUROPEAN STANDARD

NORME EUROPÉENNE

EUROPÄISCHE NORM

EN 12390-1

September 2012

ICS 91.100.30

Supersedes EN 12390-1:2000

English Version

Testing hardened concrete - Part 1: Shape, dimensions and other requirements for specimens and moulds

Essai pour béton durci - Partie 1 : Forme, dimensions et autres exigences aux éprouvettes et aux moules

Prüfung von Festbeton - Teil 1: Form, Maße und andere Anforderungen für Probekörper und Formen

This European Standard was approved by CEN on 13 July 2012.

CEN members are bound to comply with the CEN/CENELEC Internal Regulations which stipulate the conditions for giving this European Standard the status of a national standard without any alteration. Up-to-date lists and bibliographical references concerning such national standards may be obtained on application to the CEN-CENELEC Management Centre or to any CEN member.

This European Standard exists in three official versions (English, French, German). A version in any other language made by translation under the responsibility of a CEN member into its own language and notified to the CEN-CENELEC Management Centre has the same status as the official versions.

CEN members are the national standards bodies of Austria, Belgium, Bulgaria, Croatia, Cyprus, Czech Republic, Denmark, Estonia, Finland, Former Yugoslav Republic of Macedonia, France, Germany, Greece, Hungary, Iceland, Ireland, Italy, Latvia, Lithuania, Luxembourg, Malta, Netherlands, Norway, Poland, Portugal, Romania, Slovakia, Slovenia, Spain, Sweden, Switzerland, Turkey and United Kingdom.

EUROPEAN COMMITTEE FOR STANDARDIZATION
COMITÉ EUROPÉEN DE NORMALISATION
EUROPÄISCHES KOMITEE FÜR NORMUNG

Management Centre: Avenue Marnix 17, B-1000 Brussels

Ref. No. EN 12390-1:2012: E

Contents

Page

Foreword

This document (EN 12390-1:2012) has been prepared by Technical Committee CEN/TC 104 “Concrete and related products”, the secretariat of which is held by DIN.

This European Standard shall be given the status of a national standard, either by publication of an identical text or by endorsement, at the latest by March 2013, and conflicting national standards shall be withdrawn at the latest by March 2013.

Attention is drawn to the possibility that some of the elements of this document may be the subject of patent rights other than those identified above. CEN [and/or] CENELEC shall not be held responsible for identifying any or all such patent rights.

This document supersedes EN 12390-1:2000.

This standard is one of a series on testing concrete.

EN 12390, *Testing hardened concrete,* consists of the following parts:

— *Part 1: Shape, dimensions and other requirements for specimens and moulds*;

— *Part 2: Making and curing specimens for strength tests*;

— *Part 3: Compressive strength of test specimens*;

— *Part 4: Compressive strength — Specification for testing machines*;

— *Part 5: Flexural strength of test specimens*;

— *Part 6: Tensile splitting strength of test specimens*;

— *Part 7: Density of hardened concrete*;

— *Part 8: Depth of penetration of water under pressure*;

— *Part 9: Freeze-thaw resistance — Scaling (technical specification);*

— *Part 10: Determination of the relative carbonation resistance of concrete (technical specification)*;

— *Part 11: Determination of the chloride resistance of concrete, unidirectional diffusion (technical specification)*.

The following amendments have been made to the former edition:

— editorial revision;

— increases in the allowable tolerances for the dimensions of the specimens which reflect current industry practice.

This standard recognises alternative approaches towards obtaining test specimens of the correct sizes and shapes. The first is to use moulds whose life is limited and to measure the specimens to ensure conformity. The second is to cast specimens in calibrated metal moulds which meet tighter tolerances than for specimens. The use of calibrated moulds allows relaxation on the requirement for measuring the specimens.

Annex A gives the application of EN ISO 1101 to measuring the shapes of concrete test specimens and moulds.

Annex B gives a method to measure the flatness of specimens and moulds.

According to the CEN/CENELEC Internal Regulations, the national standards organizations of the following countries are bound to implement this European Standard: Austria, Belgium, Bulgaria, Croatia, Cyprus, Czech Republic, Denmark, Estonia, Finland, Former Yugoslav Republic of Macedonia, France, Germany, Greece, Hungary, Iceland, Ireland, Italy, Latvia, Lithuania, Luxembourg, Malta, Netherlands, Norway, Poland, Portugal, Romania, Slovakia, Slovenia, Spain, Sweden, Switzerland, Turkey and the United Kingdom.

1 Scope

This European Standard specifies the shape, dimensions and tolerances of cast concrete test specimens in the form of cubes, cylinders and prisms, and of the moulds required to produce them.

NOTE The tolerances specified in this European Standard are based on the needs of strength testing, but they can be applicable to tests for other properties.

2 Normative references

The following documents, in whole or in part, are normatively referenced in this document and are indispensable for its application. For dated references, only the edition cited applies. For undated references, the latest edition of the referenced document (including any amendments) applies.

EN ISO 1101:2005, *Geometrical Product Specifications (GPS) — Geometrical tolerancing — Tolerances of form, orientation, location and run-out (ISO 1101:2004)*

3 Terms and definitions

For the purposes of this document, the terms and definitions given in EN ISO 1101:2005 and the following apply.

3.1
nominal size
commonly used description of specimen size

3.2
designated size
specimen size in millimetres, selected and declared by the user of this standard from amongst the allowed range of nominal sizes

4 Shape, dimensions and tolerances of specimens

4.1 General

For application of EN ISO 1101 to the measurement of concrete test specimens and moulds in respect to flatness, perpendicularity and straightness, see Annex A.

For each shape of test specimen, cube, cylinder and prism, the nominal size d (Figures 1, 2 and 3) should be chosen to be at least three and a half times the maximum aggregate size (D_{max} according to EN 206-1) in the concrete.

4.2 Cubes

4.2.1 Nominal sizes

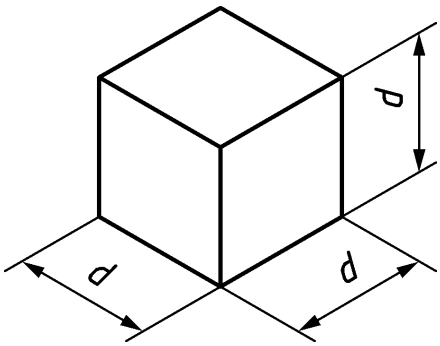

d, mm	100	150	200	250	300

Figure 1 — Cube – nominal sizes

4.2.2 Designated sizes

Designated sizes may be selected within ± 10 % of the nominal size

4.2.3 Tolerances

4.2.3.1 Between moulded surfaces the tolerance on the designated size (d) is 1,0 %.

4.2.3.2 Between the top trowelled face and the moulded bottom face the tolerance on the designated size is 1,5 %.

4.2.3.3 The tolerance on the flatness of the potential load bearing surfaces is 0,0006d mm (see Annex B).

4.2.3.4 The tolerance on the perpendicularity of the sides of the cube, with reference to the base, as cast, is 0,5 mm.

4.3 Cylinders

4.3.1 Nominal sizes

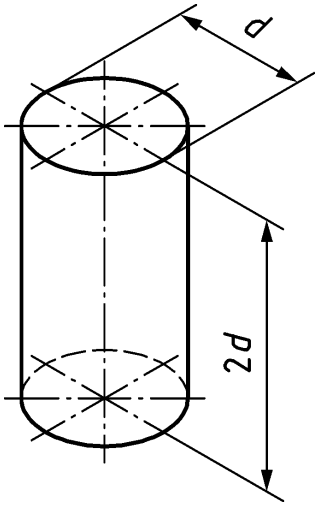

d, mm	100	113 [a]	150	200	250	300
[a] This has a load-bearing area of 10 000 mm^2.						

Figure 2 — Cylinder – nominal size

4.3.2 Designated sizes

Designated sizes may be selected within ± 10 % of the nominal size.

4.3.3 Tolerances

4.3.3.1 The tolerance on the designated diameter (d) is 1,0 %.

4.3.3.2 The tolerance on the flatness of the load-bearing surface is 0,0006d mm (see Annex B).

4.3.3.3 The tolerance on the perpendicularity of the side, with reference to the end faces, is 0,007d mm.

4.3.3.4 The tolerance on the height (2d) is 5 %.

4.3.3.5 For specimens to be used for the tensile splitting strength test, the straightness tolerance on the generating line of the cylinder is 0,2 mm.

4.3.4 Applicability of tolerances

4.3.4.1 Specimens with moulded end faces, or with end faces adjusted by grinding, shall conform to 4.3.3.

4.3.4.2 Specimens with end faces adjusted using sulfur capping, high alumina cement capping, or similar capping shall conform to 4.3.3.1 before capping and to 4.3.3.2, 4.3.3.3 and 4.3.3.4 after capping.

4.3.4.3 Specimens with end faces adjusted using the sandbox method or similar methods shall conform to 4.3.3.1 and 4.3.3.4 before capping and to 4.3.3.3 after fixing the box(es).