SLOVENSKI STANDARD
SIST EN 1124-2:2014

01-oktober-2014

Nadomešča:

SIST EN 1124-2:2009

Vzdolžno varjene nerjavne jeklene cevi in spojniki z obojko za sisteme za odpadno vodo - 2. del: Sistem S - Oblike in mere

Pipes and fittings of longitudinally welded stainless steel pipes with spigot and socket for waste water systems - Part 2: System S, forms and dimensions

Rohre und Formstücke aus längsnahtgeschweißtem, nichtrostendem Stahlrohr mit Steckmuffe für Abwasserleitungen - Teil 2: System S, Formen und Maße

Tubes et raccords de tube soudés longitudinalement en acier inoxydable, à manchon enfichable pour réseaux d'assainissement - Partie 2: Système S, formes et dimensions

Ta slovenski standard je istoveten z: EN 1124-2:2014

ICS:

23.040.10	Železne in jeklene cevi	Iron and steel pipes
93.030	Zunanji sistemi za odpadno vodo	External sewage systems

SIST EN 1124-2:2014 **en,fr,de**

EUROPEAN STANDARD

NORME EUROPÉENNE

EUROPÄISCHE NORM

EN 1124-2

June 2014

ICS 23.040.10; 23.040.40

Supersedes EN 1124-2:2007

English Version

Pipes and fittings of longitudinally welded stainless steel pipes with spigot and socket for waste water systems - Part 2: System S, forms and dimensions

Tubes et raccords de tube soudés longitudinalement en acier inoxydable, à manchon enfichable pour réseaux d'assainissement - Partie 2: Système S, formes et dimensions

Rohre und Formstücke aus längsnahtgeschweißtem, nichtrostendem Stahlrohr mit Steckmuffe für Abwasserleitungen - Teil 2: System S, Formen und Maße

This European Standard was approved by CEN on 17 April 2014.

CEN members are bound to comply with the CEN/CENELEC Internal Regulations which stipulate the conditions for giving this European Standard the status of a national standard without any alteration. Up-to-date lists and bibliographical references concerning such national standards may be obtained on application to the CEN-CENELEC Management Centre or to any CEN member.

This European Standard exists in three official versions (English, French, German). A version in any other language made by translation under the responsibility of a CEN member into its own language and notified to the CEN-CENELEC Management Centre has the same status as the official versions.

CEN members are the national standards bodies of Austria, Belgium, Bulgaria, Croatia, Cyprus, Czech Republic, Denmark, Estonia, Finland, Former Yugoslav Republic of Macedonia, France, Germany, Greece, Hungary, Iceland, Ireland, Italy, Latvia, Lithuania, Luxembourg, Malta, Netherlands, Norway, Poland, Portugal, Romania, Slovakia, Slovenia, Spain, Sweden, Switzerland, Turkey and United Kingdom.

EUROPEAN COMMITTEE FOR STANDARDIZATION
COMITÉ EUROPÉEN DE NORMALISATION
EUROPÄISCHES KOMITEE FÜR NORMUNG

CEN-CENELEC Management Centre: Avenue Marnix 17, B-1000 Brussels

Contents

Page

Foreword

This document (EN 1124-2:2014) has been prepared by Technical Committee CEN/TC 165 “Waste water engineering”, the secretariat of which is held by DIN.

This European Standard shall be given the status of a national standard, either by publication of an identical text or by endorsement, at the latest by December 2014, and conflicting national standards shall be withdrawn at the latest by December 2014.

Attention is drawn to the possibility that some of the elements of this document may be the subject of patent rights. CEN [and/or CENELEC] shall not be held responsible for identifying any or all such patent rights.

This document supersedes EN 1124-2:2007.

In relation to the previous version of the standard, the following main modifications have been made:

a) due to the newest marked developments and new installation methods, several components of system S have been adjusted to these conditions (introduction of new products);

b) dimensional requirements have been extended and specified for compatibility with gravity drainage systems for buildings.

EN 1124, *Pipes and fittings of longitudinally welded stainless steel pipes with spigot and socket for waste water systems*, consists of the following parts:

— *Part 1: Requirements, testing, quality control*;

— *Part 2: System S, forms and dimensions*;

— *Part 3: System X – Dimensions*;

— *Part 4: Components for vacuum drainage systems and drainage systems on ships*.

According to the CEN-CENELEC Internal Regulations, the national standards organizations of the following countries are bound to implement this European Standard: Austria, Belgium, Bulgaria, Croatia, Cyprus, Czech Republic, Denmark, Estonia, Finland, Former Yugoslav Republic of Macedonia, France, Germany, Greece, Hungary, Iceland, Ireland, Italy, Latvia, Lithuania, Luxembourg, Malta, Netherlands, Norway, Poland, Portugal, Romania, Slovakia, Slovenia, Spain, Sweden, Switzerland, Turkey and the United Kingdom.

Introduction

Pipes and fittings of longitudinally welded, stainless steel pipes with spigot and socket for waste water systems as specified in this part of EN 1124 and EN 1124-3 are used in gravity drainage systems in buildings. For vacuum drainage systems and drainage systems on ships, it was necessary to specify additional requirements and further dimensional specifications for components and joints used in these systems. Components specified in EN 1124-4 are used for vacuum drainage systems and for drainage systems in shipbuilding.

1 Scope

This European Standard applies to pipes and fittings of longitudinally welded stainless steel pipes with spigot and socket for waste water systems and specifies dimensions and tolerances for pipes, fittings and pipe connectors and establishes a system of designations for the different pipe and fitting types that conform to the stated requirements.

This part of EN 1124 is only valid in connection with EN 1124-1.

2 Normative references

The following documents, in whole or in part, are normatively referenced in this document and are indispensable for its application. For dated references, only the edition cited applies. For undated references, the latest edition of the referenced document (including any amendments) applies.

EN 1124-1:1999, *Pipes and fittings of longitudinally welded stainless steel pipes with spigot and socket for waste water systems - Part 1: Requirements, testing, quality control*

EN ISO 228-1, *Pipe threads where pressure-tight joints are not made on the threads - Part 1: Dimensions, tolerances and designation (ISO 228-1)*

3 Terms and definitions

For the purposes of this document, the terms and definitions given in EN 1124-1:1999 apply.

4 Symbols

DN/OD	Nominal size with regard to the outside diameter
d	Diameter
t	Socket construction depths
s	Wall thickness
L	Effective length
l	Construction lengths
r	Radius
α	Angle
e	Off-set dimension (shift)
t_5	Least insertion depth
o	Ovality

5 Dimensions

5.1 General and tolerances

The figures in this document are simplified drawings. The dimensions given shall be followed.

Where no tolerances are given in this European Standard, tolerances for linear dimensions shall be followed in accordance with Table 1, tolerances for radii shall be followed in accordance with Table 2 and tolerances for angular dimensions, referring to the smaller side length, shall be followed in accordance with Table 3.

Table 1 — Tolerances for linear dimensions

Dimensions in millimetres

Dimensional range	Tolerances for linear dimensions
0 to 300	±5
> 300	±8

Table 2 — Tolerances for radii

Dimensions in millimetres

Dimensional range	Tolerances for radii
> 26 to 181	±3
> 181 to 378	±4
> 378 to 457	±5

Table 3 — Tolerances for angles

Side length (referring to the smaller side) mm	Tolerances for angles degrees
> 10 to 120	±3
> 120 to 400	±4
> 400	±5

5.2 Sockets

The socket dimensions in accordance with Figure 1 shall conform to Table 4.

Details not specified shall be chosen appropriately.

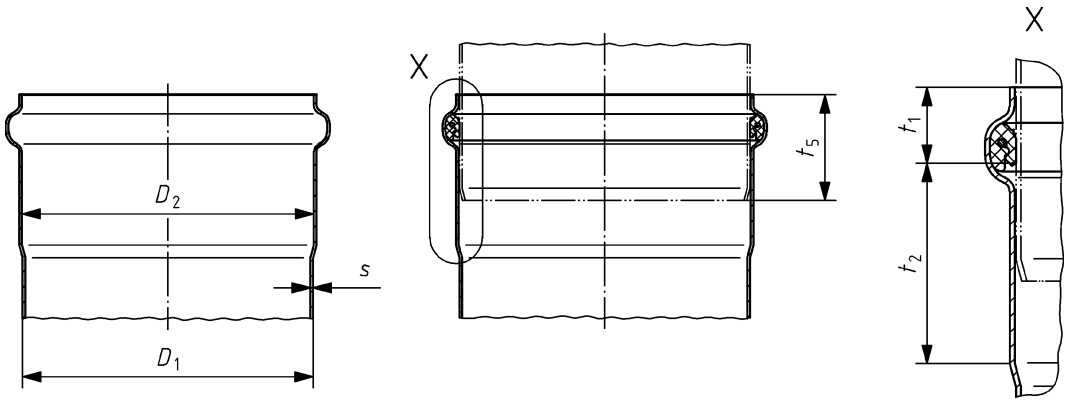

a) b)

Key

a standard socket

b socket joint

X effective sealing point

Figure 1 — Socket types

Table 4 — Dimensions and tolerances for sockets

Dimensions in millimetres

Nominal size DN/OD	Dimensions and tolerances						
	D_1	D_2	o	s	t_1 max	t_2 max	t_5[a]
40	$40^{+0,2}_{0}$	$40,7^{+0,5}_{0}$	< 2 % of DN	1,00 ± 0,2	18	18	30
50	$50^{+0,2}_{0}$	$50,5^{+0,6}_{0}$				20	
75	$75^{+0,3}_{0}$	$75,6^{+0,6}_{0}$			20	25	35
82	$82,4^{+0,3}_{0}$	$83,2^{+0,4}_{0}$				30	
90	$90^{+0,3}_{0}$	$90,8^{+0,5}_{0}$			24	30	40
110	$110^{+0,3}_{0}$	$110,6^{+0,7}_{0}$			26	32	
125	$125^{+0,3}_{0}$	$125,8^{+0,6}_{0}$				35	45
160	$160^{+0,4}_{0}$	$160,7^{+0,8}_{0}$		1,25 ± 0,2	32	42	50
200	$200^{+0,4}_{0}$	$200,8^{+0,8}_{0}$		1,50 ± 0,3	40	50	55
250	$250^{+0,5}_{0}$	$251,0^{+0,8}_{0}$		$1,50^{+0,8}_{0,3}$	45	55	65
315	$315^{+0,6}_{0}$	$316,2^{+0,8}_{0}$		$1,50^{+0,8}_{0,3}$		62	

[a] Installation instructions only (necessary least insertion depth for tightness of pipe connection).

5.3 Pipes – Shape B 1

The effective length of pipes shall conform to Table 5.

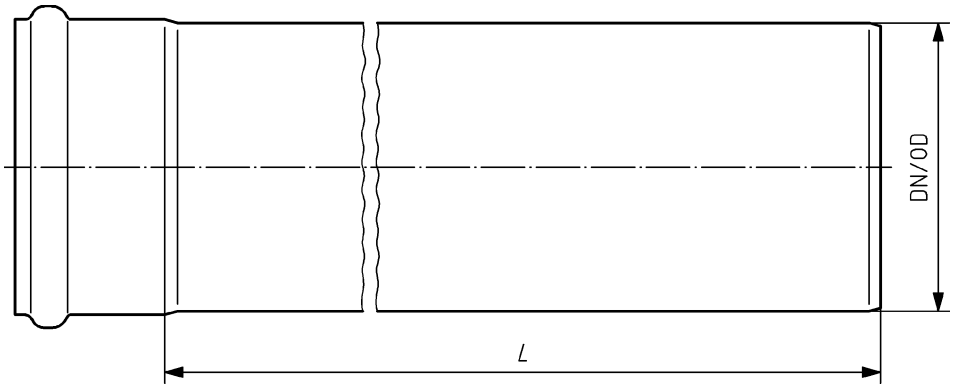

Figure 2 — Shape B 1

Designation of a drainage steel pipe (B 1) of nominal size DN/OD 110 with an effective length L = 1 000 mm:

Pipe EN 1124-2 — B 1 – 110 – 1000

Table 5 — Dimensions for effective length L

Dimensions in millimetres

Nominal size DN/OD	Effective length *L* ± 5										
40	150	250	500	750	1 000	1 500	2 000	3 000	4 000	5 000	6 000
50											
75											
82											
90											
110											
125											
160											
200											
250											
315											

5.4 Bends

5.4.1 Bends – Shape C 1 and C 2

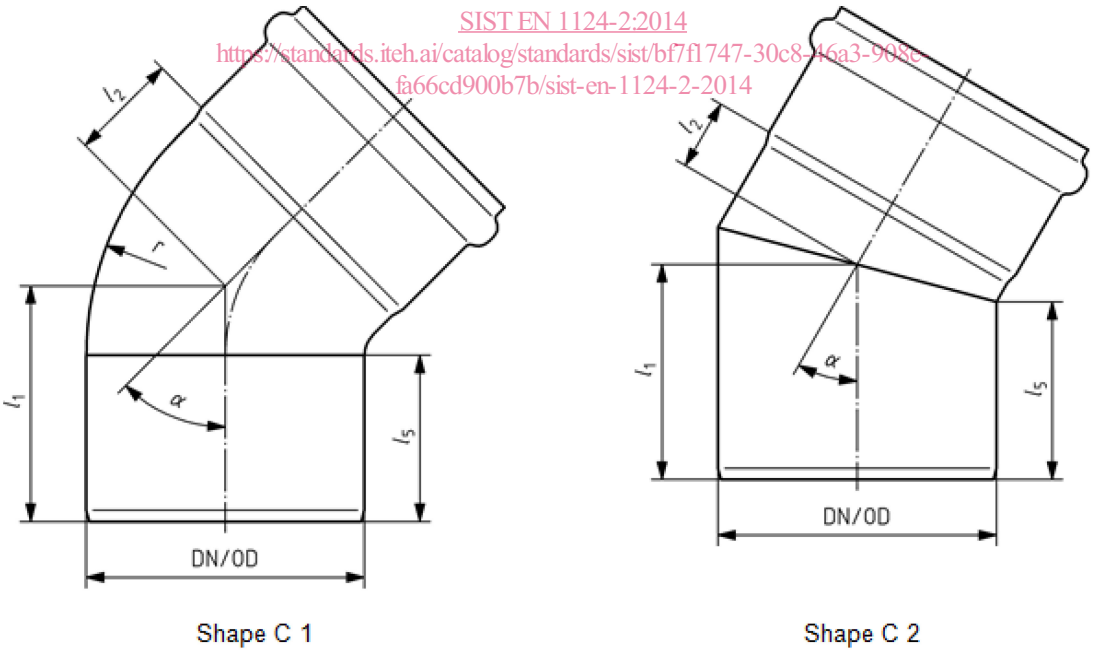

Figure 3 — Shapes C 1 and C 2

Designation of a bend (C 2) of nominal size DN/OD 110 and α = 45°:

Bend EN 1124-2 — C 2 – 110 – 45

Table 6 — Dimensions for shapes C 1 and C 2

Dimensions in millimetres

Nominal size	α = 15°			α = 30°			α = 45°				α = 70°				α = 87,5°			
DN/OD	l_1	l_2	l_5	l_1	l_2	l_5	l_1	l_2	l_5	r	l_1	l_2	l_5	r	l_1	l_2	l_5	r
40	53	11	$\geq t_1 + t_2$	55	14	$\geq t_1 + t_2$	58	21	$\geq t_1 + t_2$	$\geq D_1$	69	27	$\geq t_1 + t_2$	$\geq D_1$	79	32	$\geq t_1 + t_2$	$\geq D_1$
50	54	12		57	16		60	26			77	35			86	40		
75	66	16		71	21		76	33			95	45			107	53		
82	66	17		71	23		80	30			94	42			109	53		
90	72	19		78	25		84	38			—	—			120	63		
110	79	22		85	28		93	43			116	59			134	73		
125	84	19		98	28		110	88			136	76			161	93		
160	99	29		110	40		131	55			163	82			181	105		
200	123	31		136	45		154	61			320	230			213	120		
250	136	40		153	58		177	76			388	292			255	158		
315	151	46		172	68		199	91			—	—			290	186		

5.4.2 Bend with stilling section – Shape C 3

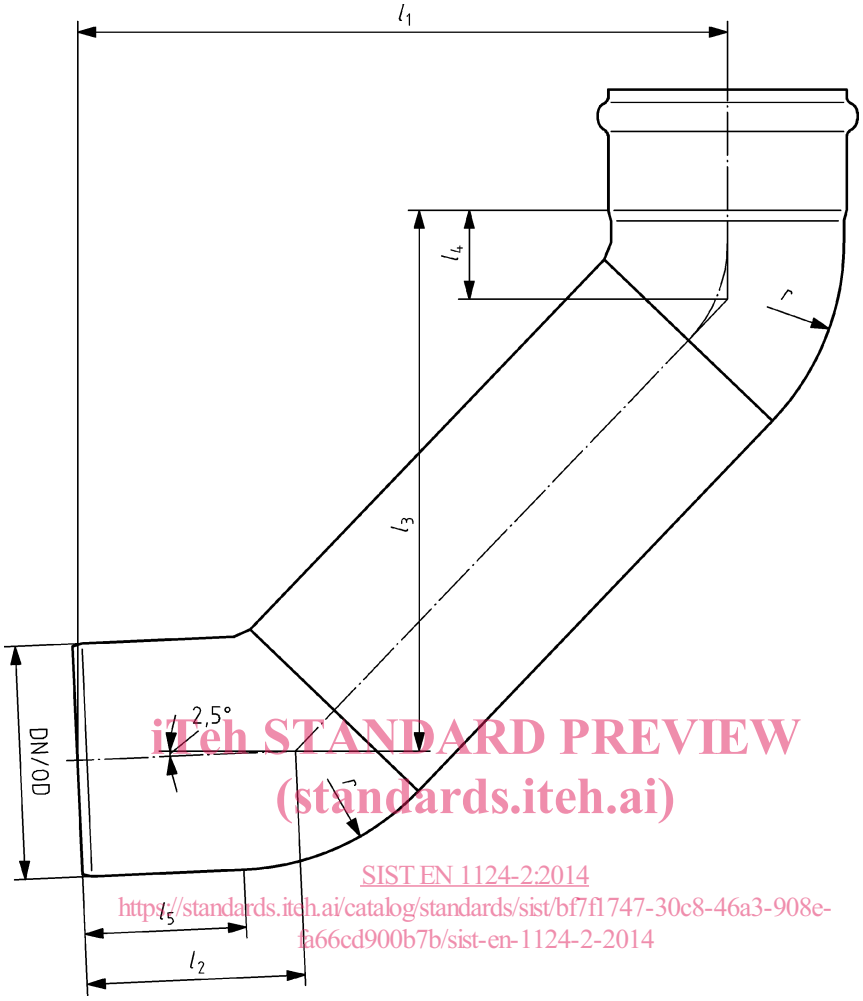

Figure 4 — Shape C 3

Designation of a bend with stilling section (C 3) of nominal size DN/OD 110:

Bend EN 1124-2 — C 3 – 110

Table 7 — Dimensions for shape C 3

Dimensions in millimetres

Nominal size DN/OD	l_1	l_2	l_3	l_4	l_5	r
50	259	72	217	22	$\geq t_1 + t_2$	$\geq D_1$
75	280	87	230	27		
110	307	103	250	38		
125	335	126	269	53		
160	354	130	282	48		