INTERNATIONAL STANDARD

ISO 8132

Second edition
2006-01-15

Hydraulic fluid power — Single rod cylinders, 16 MPa (160 bar) medium and 25 MPa (250 bar) series — Mounting dimensions for accessories

Transmissions hydrauliques — Vérins à simple tige, 16 MPa (160 bar) série moyenne et 25 MPa (250 bar) — Dimensions d'interchangeabilité des accessoires

Reference number
ISO 8132:2006(E)

ISO copyright office
Case postale 56 • CH-1211 Geneva 20
Tel. + 41 22 749 01 11
Fax + 41 22 749 09 47
E-mail copyright@iso.org
Web www.iso.org

Published in Switzerland

Foreword

ISO (the International Organization for Standardization) is a worldwide federation of national standards bodies (ISO member bodies). The work of preparing International Standards is normally carried out through ISO technical committees. Each member body interested in a subject for which a technical committee has been established has the right to be represented on that committee. International organizations, governmental and non-governmental, in liaison with ISO, also take part in the work. ISO collaborates closely with the International Electrotechnical Commission (IEC) on all matters of electrotechnical standardization.

International Standards are drafted in accordance with the rules given in the ISO/IEC Directives, Part 2.

The main task of technical committees is to prepare International Standards. Draft International Standards adopted by the technical committees are circulated to the member bodies for voting. Publication as an International Standard requires approval by at least 75 % of the member bodies casting a vote.

Attention is drawn to the possibility that some of the elements of this document may be the subject of patent rights. ISO shall not be held responsible for identifying any or all such patent rights.

ISO 8132 was prepared by Technical Committee ISO/TC 131, *Fluid power systems*, Subcommittee SC 3, *Cylinders*.

This second edition cancels and replaces the first edition (ISO 8132:1986), ISO 6981:1992 and ISO 6982:1992, which have been technically revised.

Introduction

In hydraulic fluid power systems, power is transmitted and controlled through a liquid under pressure within an enclosed circuit.

One component of such systems is the fluid power cylinder. This is a device that converts power into linear mechanical force and motion. It consists of a movable element, i.e. a piston and piston rod, operating within a cylindrical bore.

Hydraulic fluid power — Single rod cylinders, 16 MPa (160 bar) medium and 25 MPa (250 bar) series — Mounting dimensions for accessories

1 Scope

This International Standard lays down the mounting dimensions required for the interchangeability of accessories for the 16 MPa [160 bar[1)]] medium series cylinders in accordance with ISO 6020-1 and for the 25 MPa (250 bar) series cylinders in accordance with ISO 6022. The accessories have been designed specifically for use with cylinders manufactured in accordance with ISO 6020-1 and ISO 6022, but this does not limit their application.

This International Standard covers the following accessories, identified in accordance with ISO 6099:

— AP2 — rod clevis, female thread (see Figure 1 and Table 1);

— AF3 — rod flange, circular (see Figure 2 and Table 2);

— AB4 — clevis bracket, straight (see Figure 3 and Table 3);

— AB3 — clevis bracket, in angle (see Figure 4 and Table 4);

— AT4 — trunnion bracket (see Figure 5 and Table 5);

— AA8 — pivot pin, plain or spherical bearing (cotter pin or snap ring type) (see Figure 6 and Table 6);

— AP6 — rod eye spherical, female thread (see Figure 7 and Table 7);

— AP4 — rod eye plain, female thread (see Figure 8 and Table 8).

These accessories are used on hydraulic cylinders for mechanically transmitting the cylinder force. The design of these accessories is based on the maximum forces resulting from the specified internal diameters of the cylinders and pressures according to ISO 3320 and ISO 3322.

This International Standard applies only to the dimensional criteria of products manufactured in conformity with this International Standard; it does not apply to their functional characteristics.

1) 1 bar = 0,1 MPa = 10^5 Pa; 1 MPa = 1 N/mm^2

2 Normative references

The following referenced documents are indispensable for the application of this document. For dated references, only the edition cited applies. For undated references, the latest edition of the referenced document (including any amendments) applies.

ISO 286-2, *ISO system of limits and fits — Part 2: Tables of standard tolerance grades and limit deviations for holes and shafts*

ISO 3320, *Fluid power systems and components — Cylinder bores and piston rod diameters — Metric series*

ISO 3322, *Fluid power systems and components — Cylinders — Nominal pressures*

ISO 5598[2)], *Fluid power system and components — Vocabulary*

ISO 6020-1, *Hydraulic fluid power — Mounting dimensions for single rod cylinders, 16 MPa (160 bar) series — Part 1: Medium series*

ISO 6022, *Hydraulic fluid power — Mounting dimensions for single rod cylinders, 25 MPa (250 bar) series*

ISO 6099, *Fluid power systems and components — Cylinders — Identification code for mounting dimensions and mounting types*

3 Terms and definitions

For the purposes of this document, the terms and definitions given in ISO 5598 apply.

4 Mounting dimensions

The mounting dimensions for accessories are shown in Figures 1 to 8 and given in Tables 1 to 8.

5 Material — Load capacity

All cross-sections shall be selected so that, under the maximum tensile load produced by the cylinder, the yield strength of the material used for accessories is at least 2,5 times the maximum tensile load.

6 Application instructions

6.1 Installation

6.1.1 A tolerance of f8 in accordance with ISO 286-2 is recommended for the bearing shafts.

6.1.2 The rod clevis, female thread (AP2) shall be screwed firmly against the piston rod shoulder before the two pieces are locked.

6.2 Lubrication

6.2.1 Sufficient lubrication for the satisfactory performance of these accessories shall be provided.

---

2) To be published. (Revision of ISO 5598:1995)

6.2.2 The method and frequency of such lubrication depend on the particular operating conditions.

6.2.3 For maintenance-free mating parts, no additional lubrication is required.

7 Designation

Accessories in accordance with this International Standard shall be designated by the mounting type identification in accordance with ISO 6099, followed by “ISO 8132”, followed by a dash, followed by the size type from the relevant table.

EXAMPLE 1 A rod clevis, female thread of type 20 ($CK = 20$) in accordance with ISO 8132 is designed:

AP2 ISO 8132 - 20

EXAMPLE 2 A rod flange, circular of type 20 ($KK =$ M16 x 1,5) in accordance with ISO 8132 is designed:

AF3 ISO 8132 - 20

EXAMPLE 3 A clevis bracket, straight of type 20 ($CK = 20$), in accordance with ISO 8132 is designed:

AB4 ISO 8132 - 20

EXAMPLE 4 A clevis bracket, in angle of type 20 ($CK = 20$), in accordance with ISO 8132 is designed:

AB3 ISO 8132 - 20

EXAMPLE 5 A trunnion bracket of type 20 ($CR = 20$), in accordance with ISO 8132 is designed:

AT4 ISO 8132 - 20

EXAMPLE 6 A pivot pin, plain (cotter pin or snap ring type) of type 25 ($EK = 25$), in accordance with ISO 8132 is designed:

AA8 ISO 8132 - 25

EXAMPLE 7 A rod eye spherical, female thread of type 20 ($CN = 20$), in accordance with ISO 8132 is designed:

AP6 ISO 8132 - 20

EXAMPLE 8 A rod eye plain, female thread of type 20 ($CK = 20$), in accordance with ISO 8132 is designed:

AP4 ISO 8132 - 20

8 Identification statement (Reference to this International Standard)

Use the following statement in test reports, catalogues and sales literature when electing to comply with this International Standard:

“Interchangeable cylinder accessory mounting dimensions selected in accordance with ISO 8132:2006, *Hydraulic fluid power — Single rod cylinders, 16 MPa (160 bar) medium and 25 MPa (250 bar) series — Mounting dimensions for accessories.*”

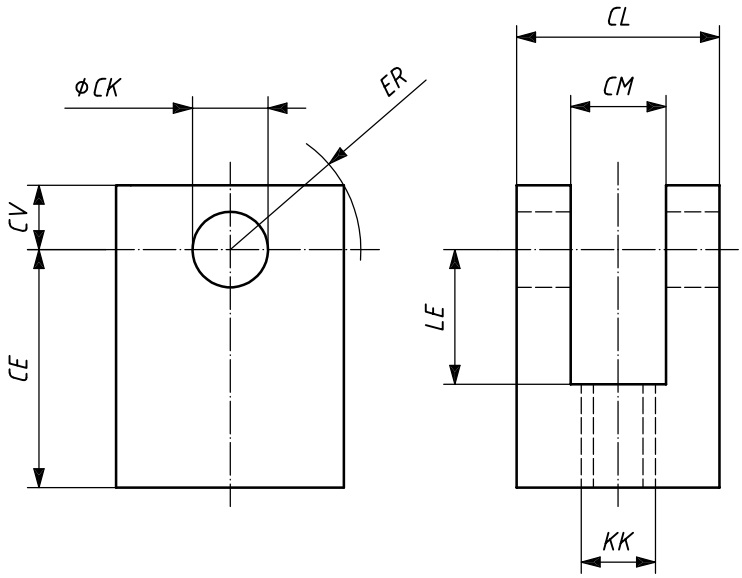

Figure 1 — AP2 — Rod clevis, female thread

Table 1 — Dimensions of AP2 — Rod clevis, female thread

Dimensions in millimetres

Type	Nominal force N	*CK* H9	*CL* h16	*CM* A13	*CE* js13	*CV* max.	*KK* 6H	*LE* min.	*ER* max.
12	8 000	12	28	12	38	16	M12 × 1,25	18	16
16	12 500	16	36	16	44	20	M14 × 1,5	22	20
20	20 000	20	45	20	52	25	M16 × 1,5	27	25
25	32 000	25	56	25	65	32	M20 × 1,5	34	32
32	50 000	32	70	32	80	40	M27 × 2	41	40
40	80 000	40	90	40	97	50	M33 × 2	51	50
50	125 000	50	110	50	120	63	M42 × 2	63	63
63	200 000	63	140	63	140	71	M48 × 2	75	71
70	250 000	70	150	70	160	80	M56 × 2	84	80
80	320 000	80	170	80	180	90	M64 × 3	94	90
90	400 000	90	190	90	195	100	M72 × 3	109	100
100	500 000	100	210	100	210	110	M80 × 3	114	110

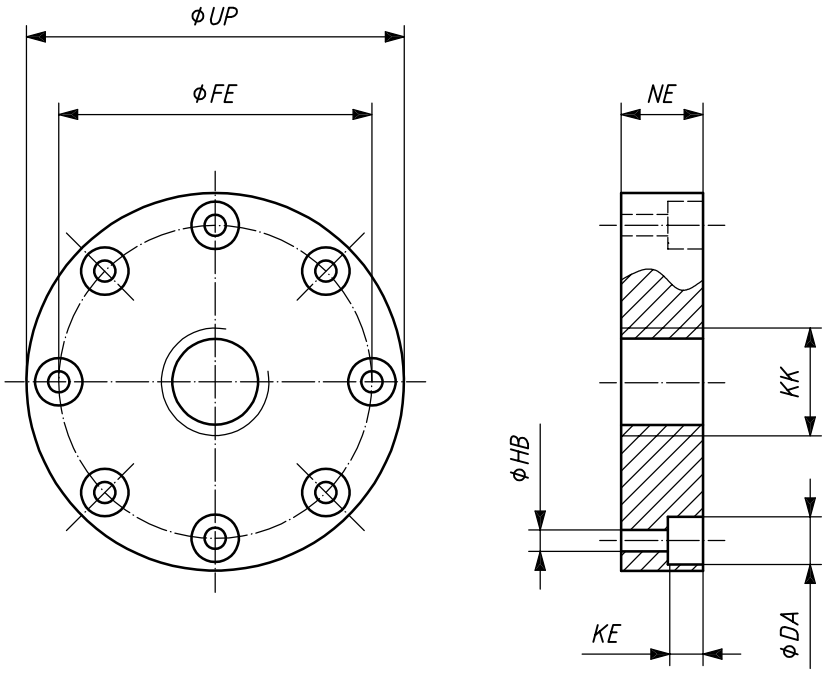

Figure 2 — AF3 — Rod flange, circular

Table 2 — Dimensions of AF3 — Rod flange, circular

Dimensions in millimetres

Type	Nominal force N	*KK* 6H	*FE* JS13	Number of holes	*HB* H13	*NE* JS13	*UP* max.	*DA* H13	*KE* $^{+0,4}_{0}$
12	8 000	M12 × 1,25	40	4	6,6	17	56	11	6,8
16	12 500	M14 × 1,5	45	4	9	19	63	14,5	9
20	20 000	M16 × 1,5	54	6	9	23	72	14,5	9
25	32 000	M20 × 1,5	63	6	9	29	82	14,5	9
32	50 000	M27 × 2	78	6	11	37	100	17,5	11
40	80 000	M33 × 2	95	8	13,5	46	120	20	13
50	125 000	M42 × 2	120	8	17,5	57	150	26	17,5
63	200 000	M48 × 2	150	8	22	64	190	33	21,5
70	250 000	M56 × 2	165	8	24	77	212	36	23,5
80	320 000	M64 × 3	180	8	26	86	230	39	25,5
90	400 000	M72 × 3	195	10	29	89	250	43	28,5
100	500 000	M80 × 3	210	10	29	96	270	43	28,5