SLOVENSKI STANDARD
oSIST prEN 13284-1:2015

01-december-2015

Emisije nepremičnih virov - Določevanje nizkih masnih koncentracij prahu - 1. del: Ročna gravimetrijska metoda

Stationary source emissions - Determination of low range mass concentration of dust - Part 1: Manual gravimetric method

Emissionen aus stationären Quellen - Ermittlung der Staubmassenkonzentration bei geringen Staubkonzentrationen - Teil 1: Manuelles gravimetrisches Verfahren

Emissions de sources fixes - Détermination de la faible concentration en masse de poussières - Partie 1 : Méthode gravimétrique manuelle

Ta slovenski standard je istoveten z: prEN 13284-1

ICS:

13.040.40 Emisije nepremičnih virov Stationary source emissions

oSIST prEN 13284-1:2015 en,fr,de

EUROPEAN STANDARD

NORME EUROPÉENNE

EUROPÄISCHE NORM

DRAFT
prEN 13284-1

October 2015

ICS 13.040.40

Will supersede EN 13284-1:2001

English Version

Stationary source emissions - Determination of low range mass concentration of dust - Part 1: Manual gravimetric method

Emissions de sources fixes - Détermination de la faible concentration en masse de poussières - Partie 1 : Méthode gravimétrique manuelle

Emissionen aus stationären Quellen - Ermittlung der Staubmassenkonzentration bei geringen Staubkonzentrationen - Teil 1: Manuelles gravimetrisches Verfahren

This draft European Standard is submitted to CEN members for enquiry. It has been drawn up by the Technical Committee CEN/TC 264.

If this draft becomes a European Standard, CEN members are bound to comply with the CEN/CENELEC Internal Regulations which stipulate the conditions for giving this European Standard the status of a national standard without any alteration.

This draft European Standard was established by CEN in three official versions (English, French, German). A version in any other language made by translation under the responsibility of a CEN member into its own language and notified to the CEN-CENELEC Management Centre has the same status as the official versions.

CEN members are the national standards bodies of Austria, Belgium, Bulgaria, Croatia, Cyprus, Czech Republic, Denmark, Estonia, Finland, Former Yugoslav Republic of Macedonia, France, Germany, Greece, Hungary, Iceland, Ireland, Italy, Latvia, Lithuania, Luxembourg, Malta, Netherlands, Norway, Poland, Portugal, Romania, Slovakia, Slovenia, Spain, Sweden, Switzerland, Turkey and United Kingdom.

Recipients of this draft are invited to submit, with their comments, notification of any relevant patent rights of which they are aware and to provide supporting documentation.

Warning : This document is not a European Standard. It is distributed for review and comments. It is subject to change without notice and shall not be referred to as a European Standard.

EUROPEAN COMMITTEE FOR STANDARDIZATION
COMITÉ EUROPÉEN DE NORMALISATION
EUROPÄISCHES KOMITEE FÜR NORMUNG

CEN-CENELEC Management Centre: Avenue Marnix 17, B-1000 Brussels

Contents

Page

European foreword

This document (prEN 13284-1:2015) has been prepared by Technical Committee CEN/TC 264 "Air quality", the secretariat of which is held by DIN.

This document is currently submitted to the CEN Enquiry.

This document will supersede EN 13284-1:2001.

This document is Part 1 of a series of European Standards:

— EN 13284-1, *Stationary source emissions – Determination of low range mass concentration of dust – Part 1: Manual gravimetric method*

— EN 13284-2, *Stationary source emissions – Determination of low range mass concentration of dust – Part 2: Automated measuring systems*

1 Scope

This European Standard specifies the standard reference method (SRM) for the measurement of low dust concentration in ducted gaseous streams in the concentrations below 50 mg/m³ at standard conditions.

This European Standard is primarily developed and validated for gaseous streams emitted by waste incinerators. More generally, it can be applied to gases emitted from stationary sources, and to higher concentrations.

If the gases contain unstable, reactive or semi-volatile substances, the measurement depends on the sampling and filter treatment conditions.

This method has been validated in field tests with special emphasis to dust concentrations around 5 mg/m³. The results of the field tests are presented in Annex A.

2 Normative references

The following documents, in whole or in part, are normatively referenced in this document and are indispensable for its application. For dated references, only the edition cited applies. For undated references, the latest edition of the referenced document (including any amendments) applies.

EN 15259, *Air quality - Measurement of stationary source emissions - Requirements for measurement sections and sites and for the measurement objective, plan and report*

EN ISO 16911-1, *Stationary source emissions - Manual and automatic determination of velocity and volume flow rate in ducts - Part 1: Manual reference method (ISO 16911-1)*

ISO 5725-2, *Accuracy (trueness and precision) of measurement methods and results — Part 2: Basic method for the determination of repeatability and reproducibility of a standard measurement method*

3 Terms and definitions

For the purposes of this document, the following terms and definitions apply.

3.1
dust
particles, of any shape, structure or density, dispersed in the gas phase at the sampling point conditions which may be collected by filtration under specified conditions after representative sampling of the gas to be analysed, and which remain upstream of the filter and on the filter after drying under specified conditions

3.2
filtration temperature
temperature of the sampled gas immediately downstream of the filter

3.3
in-stack filtration
filtration in the duct with the filter in its filter housing placed immediately downstream of the sampling nozzle

3.4
out-stack filtration
filtration outside of the duct with the filter in its heated filter housing placed downstream of the sampling nozzle and the suction tube (sampling probe)

3.5
isokinetic sampling
sampling at a flow rate such that the velocity v_n and direction of the gas entering the sampling nozzle are the same as the velocity v_d and direction of the gas in the duct at the measurement point

Note 1 to entry: Figure 1 gives an illustration of isokinetic sampling.

Note 2 to entry: Annex B shows the influence of the isokinetic rate on the representativeness of the collected particles.

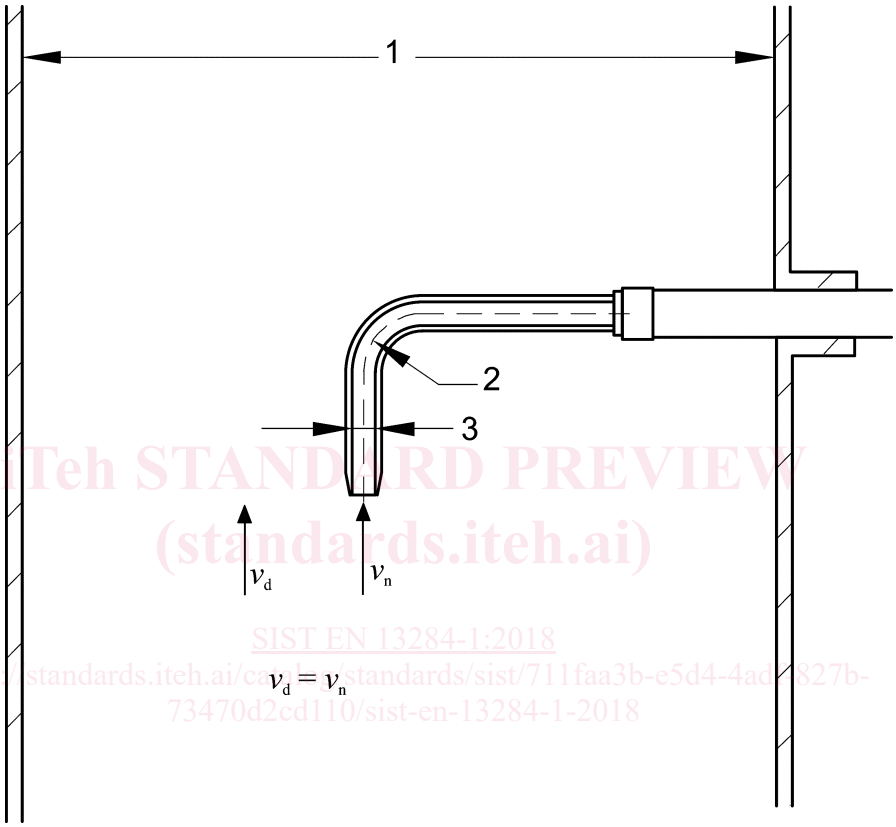

Key

1 duct

2 radius of the bend (minimum 1,5 *i*)

3 internal diameter *i*

Figure 1 — Isokinetic sampling

3.6
isokinetic rate
velocity ratio v_n/v_d expressed in percentage as a characteristic of the deviation from isokinetic sampling

3.7
hydraulic diameter
d_h
quotient of four times the area *A* and the perimeter *P* of the measurement plane

$$d_h = \frac{4 \times A}{P} \tag{1}$$

[SOURCE: EN 15259:2007]

3.8
measurement plane
plane normal to the centreline of the duct at the sampling position

[SOURCE: EN 15259:2007]

Note 1 to entry: Measurement plane is also known as sampling plane.

3.9
measurement line
line in the sampling plane along which the sampling points are located, bounded by the inner duct wall

[SOURCE: EN 15259:2007]

Note 1 to entry: Measurement line is also known as sampling line.

Note 2 to entry: Figure 2 gives an illustration of definitions in relation to a circular duct.

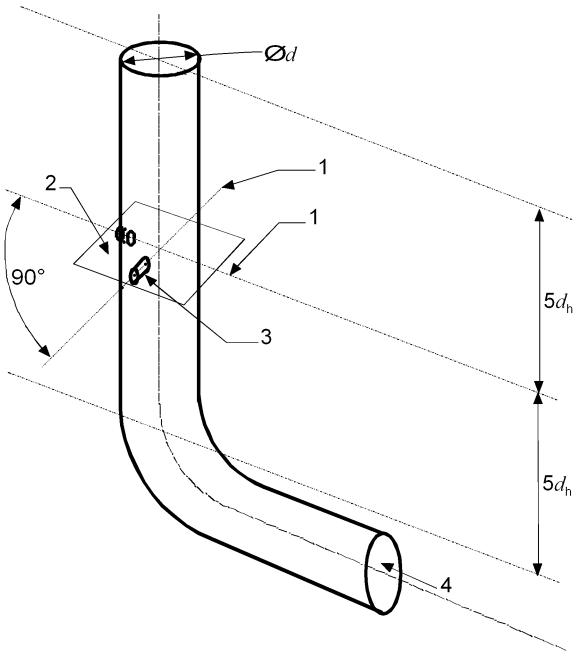

Key

1 measurement line

2 measurement plane

3 measurement port

4 flow direction

Figure 2 — Illustration of definitions in relation to a circular duct

3.10
measurement point
position in the measurement plane at which the sample stream is extracted or the measurement data are obtained directly

[SOURCE: EN 15259:2007]

Note 1 to entry: Measurement point is also known as sampling point.

3.11
measurement port
opening in the waste gas duct along the measurement line, through which access to the waste gas is gained

[SOURCE: EN 15259:2007]

Note 1 to entry: Measurement port is also known as sampling port or access port.

3.12
standard conditions
reference values for a dry gas at a pressure of 101,325 kPa rounded to 101,3 kPa and a temperature of 273,15 K rounded to 273 K

3.13
field blank
test sample obtained according to the field blank procedure

3.14
field blank procedure
procedure used to ensure that no significant contamination has occurred during all the steps of the measurement

Note 1 to entry: This includes for instance the equipment preparation in laboratory, its transport and installation in the field as well as the subsequent analytical work in the laboratory.

3.15
field blank value
result of a measurement performed according to the field blank procedure at the plant site and in the laboratory

3.16
weighing control
procedure for the detection/correction of apparent weight variations due to possible changes between pre and post sampling weighing conditions

3.17
measurement series
successive measurements carried out at the same sampling plane, and at the same process conditions

3.18
emission limit value
ELV
mass concentration, expressed in terms of certain specific parameters, which may not be exceeded during one or more periods of time

Note 1 to entry: For purposes other than regulatory uses the measurement value is compared to a stated reference value.

4 Symbols and abbreviations

4.1 Symbols

A	area of the measurement plane
c	dust concentration
d	diameter of the duct
d_h	hydraulic diameter
f_c	correction factor
h_a	humidity of the gas in actual conditions, in percentage volume
h_m	humidity of the gas in measurement conditions, in percentage volume
i	internal diameter of the sampling nozzle
m	total mass of dust collected upstream of the filter (rinsing) and on the filter
o_m	oxygen concentration in percentage volume of dry gas measured in the duct
o_{ref}	oxygen reference concentration in percentage volume of dry gas at standard conditions
P	perimeter of the measurement plane
p_a	absolute pressure of gases in actual conditions
p_m	absolute pressure of the gas in measurement conditions
Q_a	sampling flow rate, expressed in the actual conditions in the duct
Q_m	measured sampling flow rate at gas meter conditions
T_a	temperature of the gas in actual conditions, in Kelvin
T_m	temperature of the gas in measurement conditions, in Kelvin
V	sample volume
v_d	velocity of the gas in the duct at the measurement point
v_n	velocity of the gas entering the sampling nozzle

4.2 Abbreviations

ELV	emission limit value
PTFE	polytetrafluoroethylene

5 Principle

A sample stream of the gas is extracted from the main gas stream at representative measurement points for a measured period of time, with an isokinetically controlled flow rate and a measured volume. The dust entrained in the gas sample is separated by a pre-weighed plane filter, which is then dried and re-weighed. Deposits upstream of the filter in the sampling system are also recovered and weighed. The increase of mass of the filter and the deposited mass upstream the filter are attributed to dust collected from the sampled gas, which allows the dust concentration to be calculated.

Two different configurations of the sampling system may be used depending on the characteristics of gases to be sampled (see 7.2.2).

Valid measurements can be achieved only when:

a) the gas stream in the duct at the measurement site (sampling location) has a sufficiently steady velocity profile (see EN 15259);

b) sampling is carried out without disturbance of the gas stream with a sharp edged nozzle facing into the stream under isokinetic conditions;

c) samples are taken at a pre-selected number of stated positions in the measurement plane, to allow for a non-uniform distribution of dust in the duct;

d) the sampling system is designed and operated to avoid condensation, chemical reactions and to minimize dust deposits upstream of the filter and to be leak free;

e) dust deposits upstream of the filter are taken into account;

f) the field blank value does not exceed 10 % of the lowest emission limit value set for the process or 0,5 mg/m^3, whichever is greater;

g) the limit of quantification does not exceed 10 % of the lowest emission limit value set for the process or 0,5 mg/m^3, whichever is greater;

h) the sampling and weighing procedures are adapted to the expected dust quantities;

i) the expanded uncertainty calculated by means of an uncertainty budget does not exceed the corresponding specification in the measurement objective. For regulatory purposes the expanded uncertainty shall not exceed 20 % of the emission limit value specified by the authorities unless specified otherwise by the competent authorities.

NOTE The IED e.g. specifies a maximum permissible uncertainty of 30,0 % of the daily emission limit value (ELV) for automated dust measuring systems. This requires that the expanded uncertainty of the SRM is lower for calibration purposes.

Annex D provides a summary of the requirements specified in this European Standard.

6 Measurement planning and sampling strategy

6.1 Measurement planning

Emission measurements at a plant shall be carried out such that the results are representative of the emissions from this plant for operating conditions specified in the measurement objective and comparable with results obtained for other comparable plants. Therefore, dust measurements shall be planned in accordance with EN 15259.

Before carrying out any measurements, the purpose of the sampling and the sampling procedures shall be discussed with the plant personnel concerned. The nature of the plant process, e.g. steady-state or cyclic, can affect the sampling programme. If the process can be performed in a steady-state, it is important that this is maintained during sampling.

Dates, starting times, duration of survey and sampling periods as well as plant operating conditions during these periods shall be agreed with the plant management.

Preliminary calculations are to be made on the basis of expected dust concentration in order to verify that expected sampled dust quantities are consistent with attainable field blank values, and that no overloading of the filter occurs (see Annex E).

For sampling duration limited to 30 min, required for certain trial or regulatory purposes, the uncertainty of measurement can be up to 2 mg/m³ (see Annex A). Furthermore, completion of sampling along two diameters within 30 min necessitates, even for medium size ducts, simultaneous sampling with two sampling systems.

Where possible, the sampling duration can be extended, which decreases the detection limit and improves the measurement uncertainty (see Annex E). The sampling duration should be determined, to minimize the effect of non-steady-state conditions of the stationary source.

Taking into account the objective of the measurements and the conditions of waste gases to be sampled, the user has to choose between an in-stack or an out-stack filtration device. If gas in the duct contains droplets out-stack filtration devices shall be used.

A field blank shall be taken (see 9.7).

If no suitable sampling location exists in the plant, and/or that measurements have been carried out during non-steady-state conditions of the plant, which leads to an increase of the uncertainty of the measurements, it shall be stated in the report.

6.2 Sampling strategy

6.2.1 General

Sampling requires a suitable measurement section and measurement plane.

The measurement plane shall be easily reached from convenient measurement ports and a safe working platform (see EN 15259).

Sampling shall be carried out at a sufficient number of measurement points located on the measurement plane as specified by EN 15259.

6.2.2 Measurement section and measurement plane

The measurement section and measurement plane shall meet the requirements of EN 15259.

6.2.3 Minimum number and location of measurement points

The measurements shall be performed as grid measurements.

The dimensions of the measurement plane dictate the minimum number of measurement points. This number increases as the duct dimensions increase.

EN 15259 specifies the minimum number of measurement points to be used and the location in the measurement plane for circular and rectangular ducts. The number of measurement points and the location in the measurement plane shall be selected in accordance with EN 15259.

6.2.4 Measurement ports and working platform

Measurement ports shall be provided for access to the measurement points selected in accordance with EN 15259.

Examples of suitable measurement ports are given in EN 15259.

For safety and practical reasons, the working platform shall comply with the requirements of EN 15259.