SLOVENSKI STANDARD
SIST EN 2997-014:2016

01-september-2016

Nadomešča:

SIST EN 2997-014:2011

Aeronavtika - Konektorji, električni, okrogli, priključeni z navojnim obročkom, odporni ali neodporni proti ognju, s stalno delovno temperaturo med –65 °C in 175 °C, najvišjo 200 °C - 014. del: Podlaga s kvadratno prirobnico z vključenim priborom - Standard za proizvod

Aerospace series - Connectors, electrical, circular, coupled by threaded ring, fire-resistant or non fire-resistant, operating temperatures –65 °C to 175 °C continuous, 200 °C peak - Part 014: Square flange receptacle with intergrated accessory - Product standard

Luft- und Raumfahrt - Elektrische Rundsteckverbinder mit Schraubkupplung, feuerbeständig oder nicht feuerbeständig, Betriebstemperaturen –65 °C bis 175 °C konstat, 200 °C konstat, 260 °C Spitze - Teil 014: Fester Steckverbinder mit quadratischem Montageflansch und integriertem Endgehäuse - Produktnorm

Série aérospatiale - Connecteurs électriques circulaires à accouplement par bague filetée, résistant au feu ou non, températures d'utilisation –65 °C à 175 °C continu, 200 °C continu, 260 °C en pointe - Partie 014 : Embase à fixation par collerette carrée avec accessoire intégré - Norme de produit

Ta slovenski standard je istoveten z: EN 2997-014:2016

ICS:

31.220.10	Vtiči in vtičnice, konektorji	Plug-and-socket devices. Connectors
49.060	Letalska in vesoljska električna oprema in sistemi	Aerospace electric equipment and systems

SIST EN 2997-014:2016 en,fr,de

EUROPEAN STANDARD

NORME EUROPÉENNE

EUROPÄISCHE NORM

EN 2997-014

July 2016

ICS 49.060

Supersedes EN 2997-014:2011

English Version

Aerospace series - Connectors, electrical, circular, coupled by threaded ring, fire-resistant or non fire-resistant, operating temperatures -65 °C to 175 °C continuous, 200 °C continuous, 260 °C peak - Part 014: Square flange receptacle with integrated accessory - Product standard

Série aérospatiale - Connecteurs électriques circulaires à accouplement par bague filetée, résistant au feu ou non, températures d'utilisation - 65 °C à 175 °C continu, 200 °C continu, 260 °C en pointe - Partie 014 : Embase à fixation par collerette carrée avec accessoire intégré - Norme de produit

Luft- und Raumfahrt - Elektrische Rundsteckverbinder mit Schraubkupplung, feuerbeständig oder nicht feuerbeständig, Betriebstemperaturen -65 °C bis 175 °C konstant, 200 °C konstant, 260 °C Spitze - Teil 014: Fester Steckverbinder mit quadratischem Montageflansch und integriertem Endgehäuse - Produktnorm

This European Standard was approved by CEN on 4 April 2016.

CEN members are bound to comply with the CEN/CENELEC Internal Regulations which stipulate the conditions for giving this European Standard the status of a national standard without any alteration. Up-to-date lists and bibliographical references concerning such national standards may be obtained on application to the CEN-CENELEC Management Centre or to any CEN member.

This European Standard exists in three official versions (English, French, German). A version in any other language made by translation under the responsibility of a CEN member into its own language and notified to the CEN-CENELEC Management Centre has the same status as the official versions.

CEN members are the national standards bodies of Austria, Belgium, Bulgaria, Croatia, Cyprus, Czech Republic, Denmark, Estonia, Finland, Former Yugoslav Republic of Macedonia, France, Germany, Greece, Hungary, Iceland, Ireland, Italy, Latvia, Lithuania, Luxembourg, Malta, Netherlands, Norway, Poland, Portugal, Romania, Slovakia, Slovenia, Spain, Sweden, Switzerland, Turkey and United Kingdom.

EUROPEAN COMMITTEE FOR STANDARDIZATION
COMITÉ EUROPÉEN DE NORMALISATION
EUROPÄISCHES KOMITEE FÜR NORMUNG

CEN-CENELEC Management Centre: Avenue Marnix 17, B-1000 Brussels

Contents

European foreword

This document (EN 2997-014:2016) has been prepared by the Aerospace and Defence Industries Association of Europe - Standardization (ASD-STAN).

After enquiries and votes carried out in accordance with the rules of this Association, this European Standard has received the approval of the National Associations and the Official Services of the member countries of ASD, prior to its presentation to CEN.

This European Standard shall be given the status of a national standard, either by publication of an identical text or by endorsement, at the latest by January 2017, and conflicting national standards shall be withdrawn at the latest by January 2017.

Attention is drawn to the possibility that some of the elements of this document may be the subject of patent rights. CEN [and/or CENELEC] shall not be held responsible for identifying any or all such patent rights.

This document supersedes EN 2997-014:2011.

According to the CEN-CENELEC Internal Regulations, the national standards organizations of the following countries are bound to implement this European Standard: Austria, Belgium, Bulgaria, Croatia, Cyprus, Czech Republic, Denmark, Estonia, Finland, Former Yugoslav Republic of Macedonia, France, Germany, Greece, Hungary, Iceland, Ireland, Italy, Latvia, Lithuania, Luxembourg, Malta, Netherlands, Norway, Poland, Portugal, Romania, Slovakia, Slovenia, Spain, Sweden, Switzerland, Turkey and the United Kingdom.

1 Scope

This standard specifies the characteristics of square flange mounted receptacles with integrated accessory in the family of circular electrical connectors coupled by threaded ring.

It applies to class defined in Table 3.

For contacts, filler plugs associated with this receptacle, see EN 2997-002. For plugs, see EN 2997-008 and EN 2997-016 and for protective covers, see EN 2997-009.

2 Normative references

The following documents, in whole or in part, are normatively referenced in this document and are indispensable for its application. For dated references, only the edition cited applies. For undated references,

EN 2997-001, *Aerospace series - Connectors, electrical, circular, coupled by threaded ring, fire-resistant or non fire-resistant, operating temperatures – 65 °C to 175 °C continuous, 200 °C continuous, 260 °C peak - Part 001: Technical specification*

EN 2997-002, *Aerospace series - Connectors, electrical, circular, coupled by threaded ring, fire-resistant or non fire-resistant, operating temperatures - 65 °C to 175 °C continuous, 200 °C continuous, 260 °C peak - Part 002: Specification of performance and contact arrangements*

EN 2997-008, *Aerospace series - Connectors, electrical, circular, coupled by threaded ring, fire-resistant or non fire-resistant, operating temperatures - 65 °C to 175 °C continuous, 200 °C continuous, 260 °C peak - Part 008: Plug - Product standard*

EN 2997-009, *Aerospace series - Connectors, electrical, circular, coupled by threaded ring, fire-resistant or non fire-resistant, operating temperatures - 65 °C to 175 °C continuous, 200 °C continuous, 260 °C peak - Part 009: Protective cover for receptacle - Product standard*

EN 2997-016, *Aerospace series - Connectors, electrical, circular, coupled by threaded ring, fire-resistant or non fire-resistant, operating temperatures -65 °C to 175°C continuous, 200°C continuous, 260°C peak - Part 016: Plug with integrated accessory - Product standard*

EN 3155-002, *Aerospace series - Electrical contacts used in elements of connection - Part 002: List and utilization of contacts*

3 Terms and definitions

For the purposes of this standard, the terms and definitions given in EN 2997-001 apply.

4 Required characteristics

4.1 Dimensions and mass

See Figure 1 and Table 1.

Dimensions and tolerances are in millimetres; they apply after surface treatment.

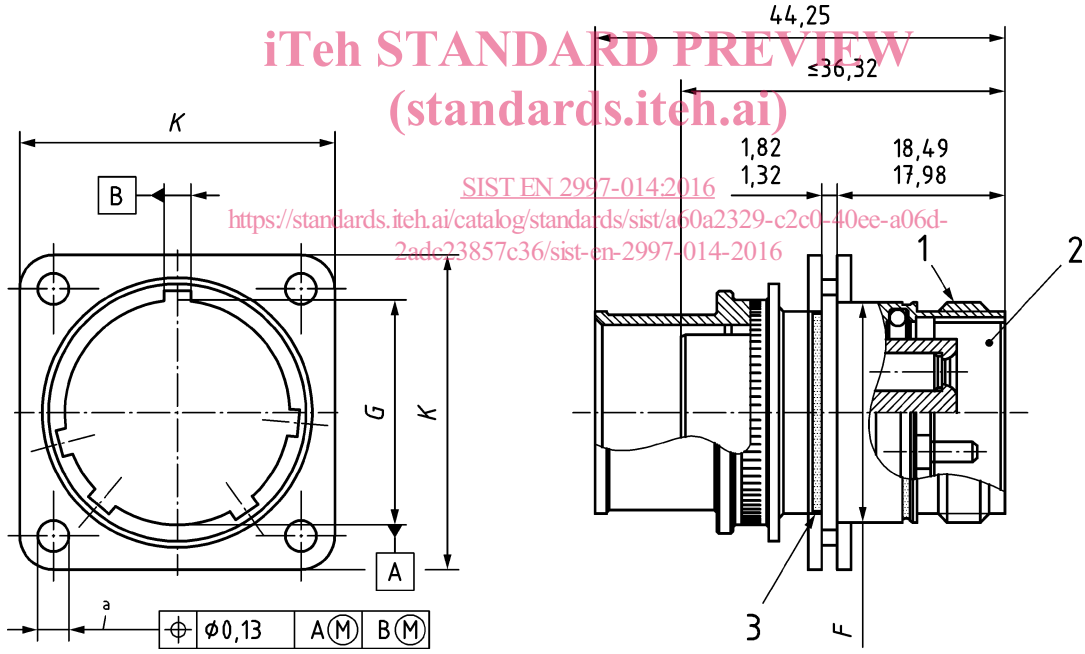

Key

1 Thread

2 See EN 2997-001

3 Blue colour band minimum width 0,64

a 4 holes $\varnothing\,3{,}30$ / $\varnothing\,3{,}10$ housing sizes 8 to 22

4 holes $\varnothing\,3{,}91$ / $\varnothing\,3{,}68$ housing sizes 24 to 28

NOTE Cable entry internal and external dimensions can be found in EN 2997-001.

Figure 1 — Square flange receptacle

Table 1 — Square flange version *(Figure 1)*

Housing size	*F* Ø max.	*G*	*K* max.	*K* min.	Mass [a] g max. Stainless steel	Mass [a] g max. Aluminium alloy
08	14,27	15,09	20,75	20,49	25	—
10	17,67	18,26	23,93	23,67	40	—
12	22,22	20,62	26,32	26,06	48	—
14	23,77	23,01	28,71	28,45	60	—
16	26,97	24,61	31,88	31,62	70	—
18	30,15	26,97	34,24	33,98	81	—
20	33,32	29,36	36,63	36,37	—	—
22	36,49	31,75	39,80	39,54	—	—
24	39,67	34,92	43,39	43,13	110	—
28	46,02	39,67	50,93	50,67	—	—

[a] Mass without contacts.

4.2 Panel cut-out and mounting of connectors

See Figure 2 and Table 2 for panel cut-out and Figure 3 for mounting of connectors.

Dimensions and tolerances are in millimetres

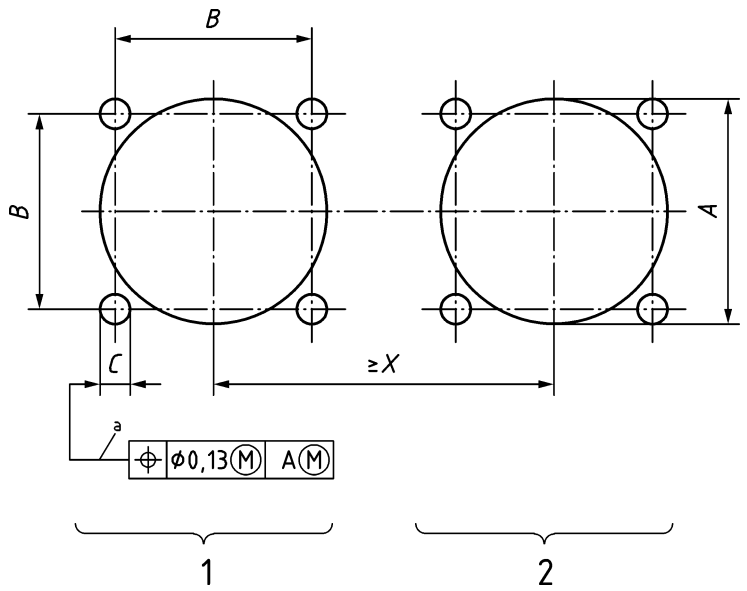

Connector one **Connector two**

Key

a 4 holes Ø *C*

X min. value is calculated as follows: *D*/2 connector one + *D*/2 connector two (see Table 2 for value *D*).

Figure 2 — Minimum distance between two connectors *(X min.)*

Table 2 — Panel cut-out *(Figure 2)*

Housing size	*A* Ø min.	*B*	*C* Ø	*D* min.
08	15,80	15,09	3,30 3,10	31,70
10	18,70	18,26		34,90
12	23,40	20,62		39,60
14	24,90	23,01		41,25
16	28,30	24,61		44,45
18	31,10	26,97		47,35
20	34,50	29,36		51,90
22	37,50	31,75		54,10
24	40,60	34,92	3,91 3,68	57,25
28	48,00	39,67		65,25

Front mounting

(except housing size 8)

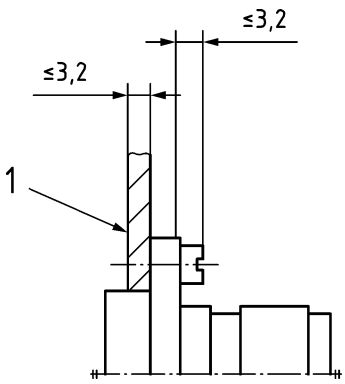

Rear mounting

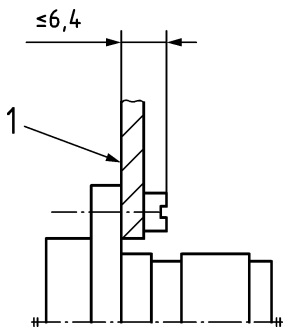

Key

1 Panel

Figure 3 — Panel mounting

4.3 Material, surface treatment

See Table 3.

4.4 Main general characteristics

See EN 2997-002.

4.5 Possible combinations of plugs and receptacles

See EN 2997-002.