SLOVENSKI STANDARD
SIST EN 1991-4:2006/AC:2013

01-julij-2013

Evrokod 1: Vplivi na konstrukcije - 4. del: Silosi in rezervoarji

Eurocode 1 - Actions on structures - Part 4: Silos and tanks

Eurocode 1: Einwirkungen auf Tragwerke - Teil 4: Einwirkungen auf Silos und Flüssigkeitsbehälter

Eurocode 1 - Actions sur les structures - Partie 4: Silos et réservoirs

Ta slovenski standard je istoveten z: EN 1991-4:2006/AC:2012

ICS:

91.010.30 Tehnični vidiki Technical aspects

SIST EN 1991-4:2006/AC:2013 en,fr,de

EUROPEAN STANDARD

NORME EUROPÉENNE

EUROPÄISCHE NORM

EN 1991-4:2006/AC

November 2012
Novembre 2012
November 2012

ICS 91.010.30

English version
Version Française
Deutsche Fassung

Eurocode 1 - Actions on structures - Part 4: Silos and tanks

Eurocode 1 - Actions sur les structures - Partie 4: Silos et réservoirs

Eurocode 1: Einwirkungen auf Tragwerke - Teil 4: Einwirkungen auf Silos und Flüssigkeitsbehälter

This corrigendum becomes effective on 21 November 2012 for incorporation in the three official language versions of the EN.

Ce corrigendum prendra effet le 21 novembre 2012 pour incorporation dans les trois versions linguistiques officielles de la EN.

Die Berichtigung tritt am 21. November 2012 zur Einarbeitung in die drei offiziellen Sprachfassungen der EN in Kraft.

EUROPEAN COMMITTEE FOR STANDARDIZATION
COMITÉ EUROPÉEN DE NORMALISATION
EUROPÄISCHES KOMITEE FÜR NORMUNG

Management Centre: Avenue Marnix 17, B-1000 Brussels

Ref. No.:EN 1991-4:2006/AC:2012 D/E/F

1 Modifications to 1.2

Replace the following reference:

"EN 1992-4 Eurocode 2: Design of concrete structures: Part 4: Liquid retaining and containment structures"

with the following one:

"EN 1992-3 Eurocode 2: Design of concrete structures: Part 3: Liquid retaining and containment structures".

Replace the following reference:

"EN 1993-1-6 Eurocode 3: Design of steel structures. General rules: Part 1.6: Supplementary rules for the strength and stability of shell structures"

with the following one:

"EN 1993-1-6 Eurocode 3: Design of steel structures. Part 1-6: Strength and Stability of Shell Structures".

2 Modification to 2.5

Replace Paragraph (3) with the following one:

"(3) A higher Action Assessment Class than that required in 2.5 (2), as described in 2.5 (5), Table 2.1, may always be adopted. Any part of the procedures for a higher Action Assessment Class may be adopted whenever it is appropriate.".

3 Modification to 5.2.1.1

In Figure 5.2, in Key 1, replace "z_0" with "z_o".

4 Modification to 5.2.2.2

In Paragraph (5), replace Formula (5.28) with:

"

$$C_{pe} = 0{,}42\ C_{op}\ [1+2E^2]\ (1 - e^{\{-1{,}5\ [(h_c/d_c)-1]\}}) \qquad \ldots (5.28)".$$

5 Modification to 5.2.2.3

In Paragraph (2), Figure 5.4, in Key 1, replace "z_0" with "z_o".

6 Modification to 6.1.2

In Paragraph (7), in Formula (6.7), delete " ." before "γ" in the first bracket as follows:

“ $p_v = \left(\frac{\gamma h_h}{n-1}\right)\left\{\left(\frac{x}{h_h}\right) - \left(\frac{x}{h_h}\right)^n\right\} + p_{vft}\left(\frac{x}{h_h}\right)^n$ ”.

7 Modification to C.6.1

Replace the whole Figure C.1 with the following figure and text:

“

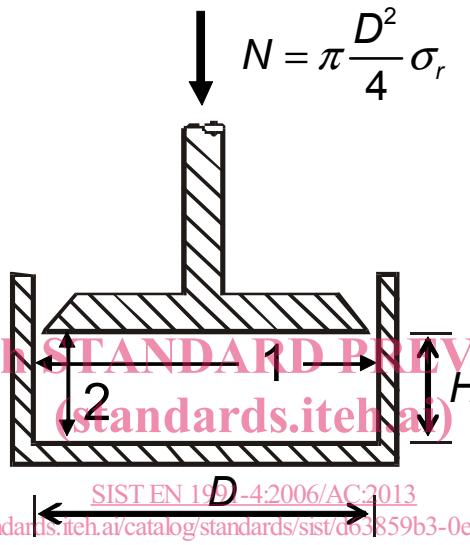

Key

1 Smooth surfaces
2 Rough surfaces

Figure C.1: Device for the determination of γ”.

8 Modification to C.7.3

Replace the whole Figure C.2 with the following figure and text:

“

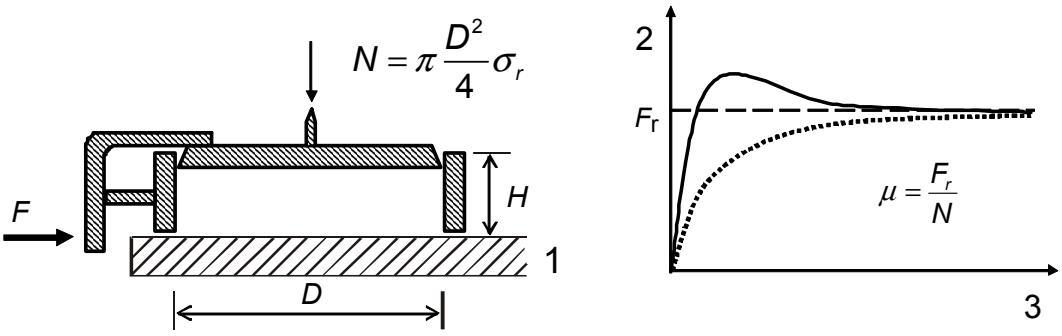

a) Cell for measuring wall friction **b) Typical shear-displacement curves**

1 Sample of silo wall surface

2 Shear force F

3 Shear cell displacement Δ

Figure C.2: Test method for determination of wall friction coefficient μ”.

9 Modification to C.8.1.1

Replace the whole Figure C.3 with the following figure and text:

“

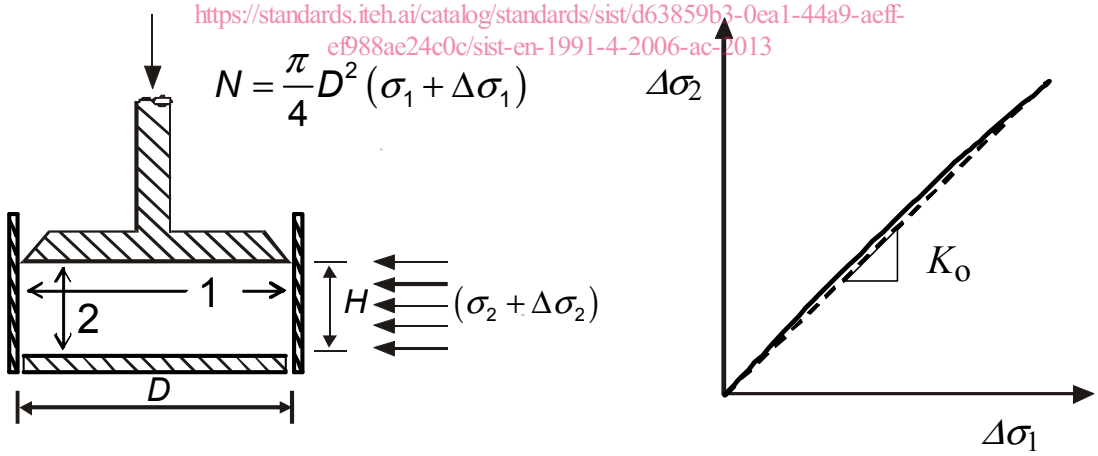

a) Cell for measuring lateral pressure ratio **b) Typical development of σ_2**

1 Smooth surfaces

2 Rough surfaces

Figure C.3: Test method for determining lateral pressure ratio K_0”.

10 Modification to C.9.1.3

In Paragraph (6), delete the bracket at the end of the last sentence as follows:

“Stresses determined from the two tests are named in Table C.1.”.