SLOVENSKI STANDARD
SIST EN 3682-001:2014

01-februar-2014

Nadomešča:

SIST EN 3682-001:2009

Aeronavtika - Konektorji, vtič in vtičnica, električni, pravokotni, zamenljivi tip, s stojalom in ploščo, s stalno delovno temperaturo do 150 °C - 001. del: Tehnična specifikacija

Aerospace series - Connectors, plug and receptacle, electrical, rectangular, interchangeable insert type, rack to panel, operating temperature 150 °C continuous - Part 001: Technical specification

Luft- und Raumfahrt - Elektrischer Rechteckstecкverbinder, freie und feste Bauform, auswechselbare Isolierkörper, Gestell-Einschubsteckverbinder, Betriebstemperatur 150 °C konstant - Teil 001: Technische Lieferbedingungen

Série aérospatiale - Connecteurs électriques rectangulaires rackables, fiches et embases, à inserts interchangeables, température d'utilisation 150 °C continu - Partie 001: Spécification technique

Ta slovenski standard je istoveten z: **EN 3682-001:2013**

ICS:

49.060	Letalska in vesoljska električna oprema in sistemi	Aerospace electric equipment and systems

SIST EN 3682-001:2014 **en,fr,de**

EUROPEAN STANDARD

NORME EUROPÉENNE

EUROPÄISCHE NORM

EN 3682-001

September 2013

ICS 49.060

Supersedes EN 3682-001:2006

English Version

Aerospace series - Connectors, plug and receptacle, electrical, rectangular, interchangeable insert type, rack to panel, operating temperature 150 °C continuous - Part 001: Technical specification

Série aérospatiale - Connecteurs électriques rectangulaires rackables, fiches et embases, à inserts interchangeables, température d'utilisation 150 °C continu - Partie 001: Spécification technique

Luft- und Raumfahrt - Elektrischer Rechtecksteckverbinder, freie und feste Bauform, auswechselbare Isolierkörper, Gestell-Einschubsteckverbinder, Betriebstemperatur 150 °C konstant - Teil 001: Technische Lieferbedingungen

This European Standard was approved by CEN on 8 May 2013.

CEN members are bound to comply with the CEN/CENELEC Internal Regulations which stipulate the conditions for giving this European Standard the status of a national standard without any alteration. Up-to-date lists and bibliographical references concerning such national standards may be obtained on application to the CEN-CENELEC Management Centre or to any CEN member.

This European Standard exists in three official versions (English, French, German). A version in any other language made by translation under the responsibility of a CEN member into its own language and notified to the CEN-CENELEC Management Centre has the same status as the official versions.

CEN members are the national standards bodies of Austria, Belgium, Bulgaria, Croatia, Cyprus, Czech Republic, Denmark, Estonia, Finland, Former Yugoslav Republic of Macedonia, France, Germany, Greece, Hungary, Iceland, Ireland, Italy, Latvia, Lithuania, Luxembourg, Malta, Netherlands, Norway, Poland, Portugal, Romania, Slovakia, Slovenia, Spain, Sweden, Switzerland, Turkey and United Kingdom.

EUROPEAN COMMITTEE FOR STANDARDIZATION
COMITÉ EUROPÉEN DE NORMALISATION
EUROPÄISCHES KOMITEE FÜR NORMUNG

Management Centre: Avenue Marnix 17, B-1000 Brussels

Ref. No. EN 3682-001:2013: E

Contents

Page

Foreword

This document (EN 3682-001:2013) has been prepared by the Aerospace and Defence Industries Association of Europe - Standardization (ASD-STAN).

After enquiries and votes carried out in accordance with the rules of this Association, this Standard has received the approval of the National Associations and the Official Services of the member countries of ASD, prior to its presentation to CEN.

This European Standard shall be given the status of a national standard, either by publication of an identical text or by endorsement, at the latest by March 2014, and conflicting national standards shall be withdrawn at the latest by March 2014.

Attention is drawn to the possibility that some of the elements of this document may be the subject of patent rights. CEN [and/or CENELEC] shall not be held responsible for identifying any or all such patent rights.

This document supersedes EN 3682-001:2006.

According to the CEN-CENELEC Internal Regulations, the national standards organizations of the following countries are bound to implement this European Standard: Austria, Belgium, Bulgaria, Croatia, Cyprus, Czech Republic, Denmark, Estonia, Finland, Former Yugoslav Republic of Macedonia, France, Germany, Greece, Hungary, Iceland, Ireland, Italy, Latvia, Lithuania, Luxembourg, Malta, Netherlands, Norway, Poland, Portugal, Romania, Slovakia, Slovenia, Spain, Sweden, Switzerland, Turkey and the United Kingdom.

Introduction

This family of connectors is derived from MIL-C-83527 with which it is intermateable and interchangeable. It offers a comprehensive range of contact arrangements. The plug is fitted with a grounding spring system which is replaceable in the field. It is particularly for use **on rack application** in zones of severe environmental conditions on board aircraft, applying EN 2282.

1 Scope

This European Standard specifies the general characteristics, the conditions for qualification, acceptance and quality assurance, as well as the test programs and groups for connectors intended for use in a temperature range from – 65 °C to 150 °C continuous.

2 Normative references

The following documents, in whole or in part, are normatively referenced in this document and are indispensable for its application. For dated references, only the edition cited applies. For undated references, the latest edition of the referenced document (including any amendments) applies.

EN 2282, *Aerospace series — Characteristics of aircraft electrical supplies*

EN 2267-002, *Aerospace series — Cables, electrical, for general purpose — Operating temperatures between – 55 °C and 260 °C — Part 002: General*

EN 2591 (all parts), *Aerospace series — Elements of electrical and optical connection — Test methods*

EN 3155 (all parts), *Aerospace series — Electrical contacts used in elements of connection*

EN 3197, *Aerospace series - Design and installation of aircraft electrical and optical interconnection systems*

EN 3682 (all parts), *Aerospace series — Connectors, plug and receptacle, electrical, rectangular, interchangeable insert type, rack to panel, operating temperature 150 °C continuous*

EN 3909, *Aerospace series — Test fluids and test methods for electric components and sub-assemblies*

EN 4529-002, *Aerospace series — Elements of electrical and optical connection — Sealing plugs — Part 002: Index of product standards*

EN 9133, *Aerospace series — Quality management systems — Qualification procedure for aerospace standard parts*

MIL-C-83527 (all parts), *Connectors, plug and receptacle, electrical, rectangular multiple insert type, rack to panel, environment resisting, 150 °C total continuous operating temperature* [1)]

MIL-L-15719, (Amendment 3), *Military specification, lubricating grease (High temperature, electric motor, ball and roller bearings)* [1)]

MIL-STD-454, *Military standard — Standard General Requirements for Electronic Equipment* [1)]

1) Published by: DoD National (US) Mil. Department of Defense http://www.defenselink.mil/

3 Terms and definitions

For the purposes of this document, the terms and definitions given in EN 2591-100 and the following apply.

3.1
LRU
Line Replaceable Unit

4 Description

4.1 General

The pair of connectors has the following characteristics:

— a metal to metal bottoming (see Figure 1);

— the interface between the plug and the receptacle connectors provides a seal between contacts when mated;

— when mated together, the connector pair and cable passage grommets are leak tight;

— inserts (except 1-70C1) are provided with an O-ring seal which provides sealing between the housing and the insert.

— low insertion force contacts;

— size 22 male contacts are mechanically protected by their installation in the insert;

— shielding continuity is provided between mated connectors housings;

— field replaceable inserts;

— EMI grounding springs are removable and field replaceable.

The connectors use sizes 22, 20, 16 and 12 crimp contacts; sizes 5, 12 and 16 coaxial contacts, size 8 triaxial contacts, quadrax contacts and fibre optical contacts.

Polarization posts and keys are provided to ensure correct connection, and these may be turned around, as required, by the user, giving 99 different connection combinations.

4.2 Receptacle

The receptacle has three polarization keys. Depending upon its housing size, the receptacle will have 2, 4, or 6 inserts.

Size 22 contacts in the receptacle are always female contacts. All larger contact sizes are male contacts.

4.3 Plug

The plug has three polarization posts. Depending upon its housing size, the plug will have 2, 4 or 6 inserts.

Size 22 contacts in the plug are always male contacts. All larger contact sizes are female contacts.

The plug is fitted with field replaceable grounding spring systems.

4.4 Materials and surface treatment

4.4.1 General

When dissimilar metals are in close contact, adequate protection against corrosion shall be used for the electromotive force of the cell not to exceed 0,25 V.

4.4.2 Housings

Connector housing material shall be protected against corrosion by a protective coating, enabling the specified test criteria to be met.

4.4.3 Contacts

Removable contacts, see EN 3682-002.

4.4.4 Non-metallic materials

The materials used for inserts, seals and grommets shall have a hardness and the mechanical and electrical characteristics consistent with the required use.

5 Design

5.1 Housings

Connector housing shall be a one piece unit. The plug shall be fitted with a resilient peripheral seal to provide environmental peripheral sealing and stabilizing between mating housings.

Electrical contact between the housings shall occur before electrical contact engagement.

5.2 Inserts

Insert shall be interchangeable and made of a rigid dielectric material or metallic material when specified. Cross-sections and angle radii shall be sufficient to ensure that no cracking, chipping or breakage can occur in normal use.

The insert shall be rear removable from the housing and shall be mechanically retained in the housing. The removal of an insert from the shell shall be done by using no other tool than a screwdriver. To install the insert in the shell, it will be necessary to lubricate the O-ring with a lubricant such as specified by MIL-L-15719.

The mating face of the insert shall ensure that a good sealing is provided when connectors are mated together. The interfacial seal shall be bonded on the insert for size 22 female contacts and on the insert for male contacts of other sizes.

The grommet shall permit sealing for all cable diameters indicated in EN 3682-002 and shall not be removable.

For sizes 5 and 8 contacts, the insert contact cavity and the grommet shall accept the sealing boots described in EN 4529-002.

The mechanical contact retention system shall be integrated in the hard insert.

Connectors shall be designed to allow the installation and removal of individual contacts without having to remove the insert from the housing. Inserts shall be for rear release rear removable contacts. Insertion, extraction tools are those specified in EN 3155 standard series.

All inserts (except 2-62Q2) having both size 8 quadrax contacts cavities and size 22 contacts cavities have a step on their front face. Inserts for receptacle connectors have the size 22 contact cavities at a higher elevation than the other contact sizes cavities. Inserts for plug connectors have the size 22 contact cavities recessed compared to the other contact cavity sizes.

6 Definition drawings and masses

General dimensions and masses of plug, receptacle and inserts are given in the product standards.

6.1 Connector mating dimensions

Connectors mated conditions are shown in Figure 1.

Contact position is defined in Figure 2.

Dimensions are in millimetres.

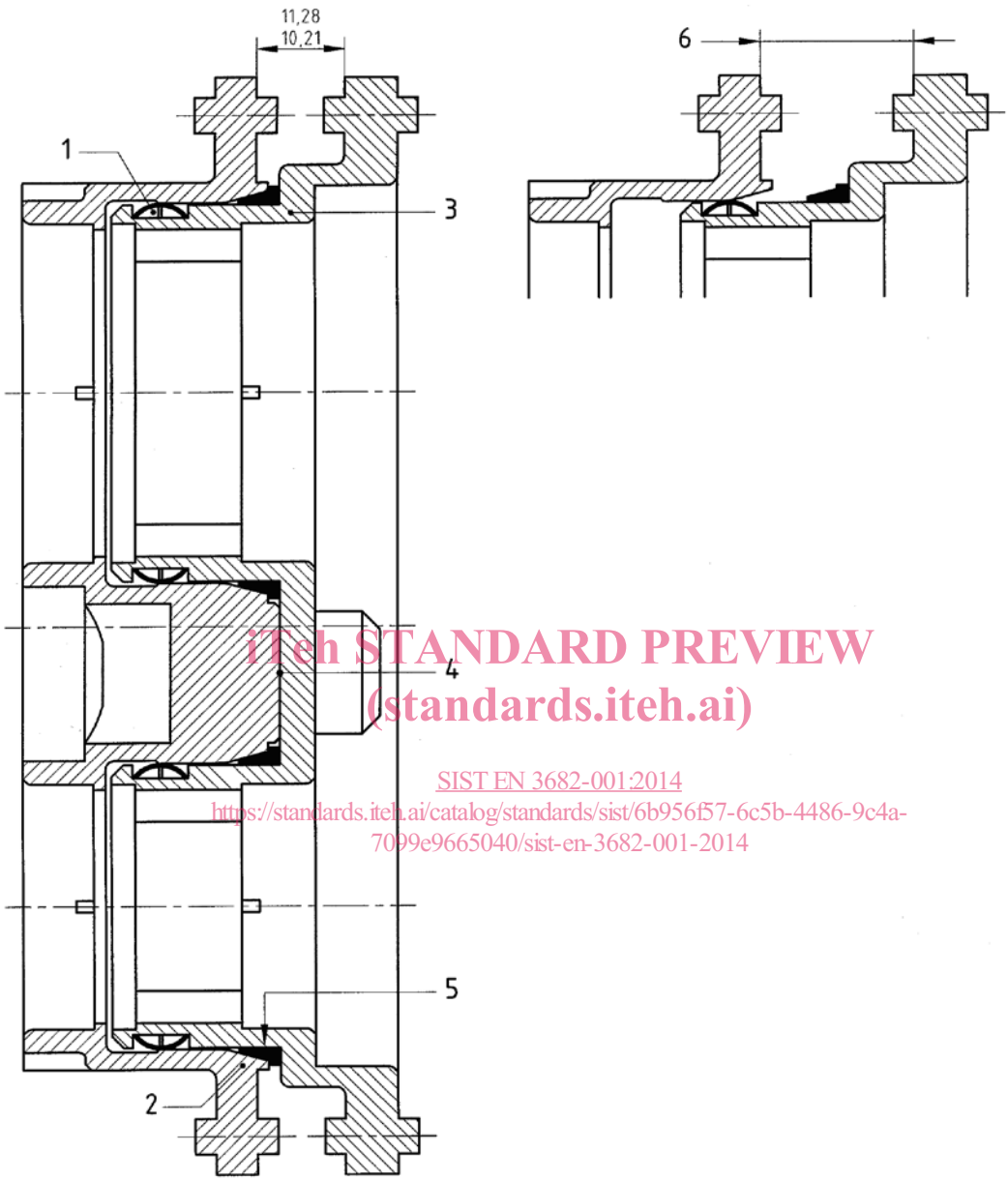

Key

1 Grounding spring system
2 Receptacle assembly
3 Plug assembly
4 Metal to metal bottoming on both sides of polarizing key retaining plate
5 Stabilizer
6 $X = 21{,}64$ initial engagement max.

Figure 1 — Connector mated conditions

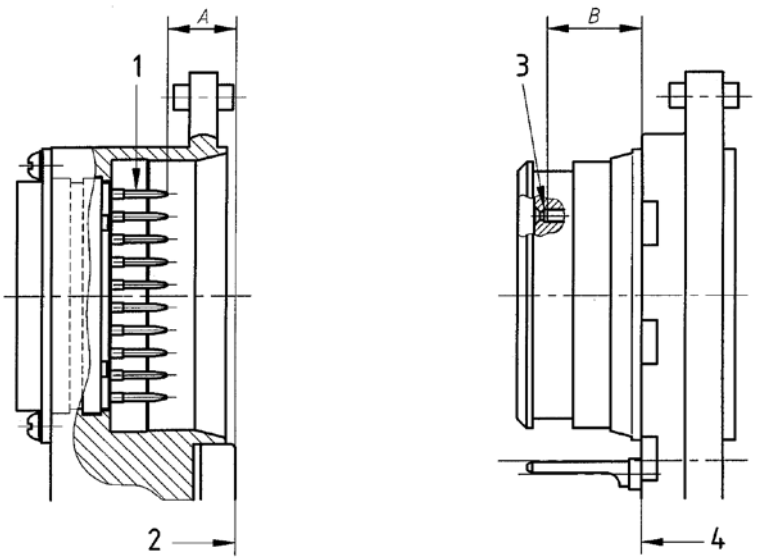

Key

1 Size 22 socket contact - Other size pin contact
2 Mechanical bottom of receptacle
3 Size 22 pin contact - Other size socket contact
4 Mechanical bottom of plug

Figure 2

Table 1 — Contact position

Contact size	Male		Female	
	A	*B*	*A*	*B*
22	–	17,20/16,33	11,18/10,56	–
20	12,19/11,12	–	–	18,82/17,55
16 [a]	10,34/9,07	–	–	18,31/17,04
12	10,34/9,17	–	–	18,14/17,02
Triaxial size 8 [b]	11,07/10,21	–	–	18,44/17,58
Quadrax size 8 [b]	11,07/10,21	–	–	18,44/17,58
Coaxial size 16 [c]	10,34/9,07	–	–	18,31/17,04
Coaxial size 12	12,19/10,97	–	–	18,11/16,92
Coaxial size 5	11,18/10,26	–	–	18,44/17,58
Coaxial size 1	10,79/9,83	–	–	20,34/19,53

[a] For arrangements 1-126 and 2-62Q2, $A = 7{,}83/7{,}07$ and $B = 15{,}76/15{,}04$.

[b] For arrangements 2-62Q2, $A = 8{,}78/8{,}04$ and $B = 15{,}92/15{,}13$.

[c] For arrangements 1-126 and 2-62Q2, $A = 7{,}98/7{,}07$ and $B = 15{,}76/15{,}05$.

6.2 Receptacle mating dimensions

Mating dimensions for sizes 2, 3 and 4 receptacle housings are specified on Figures 3, 4, 5 and 6 and Tables 2, 3 and 4.

Dimensions are in millimetres.

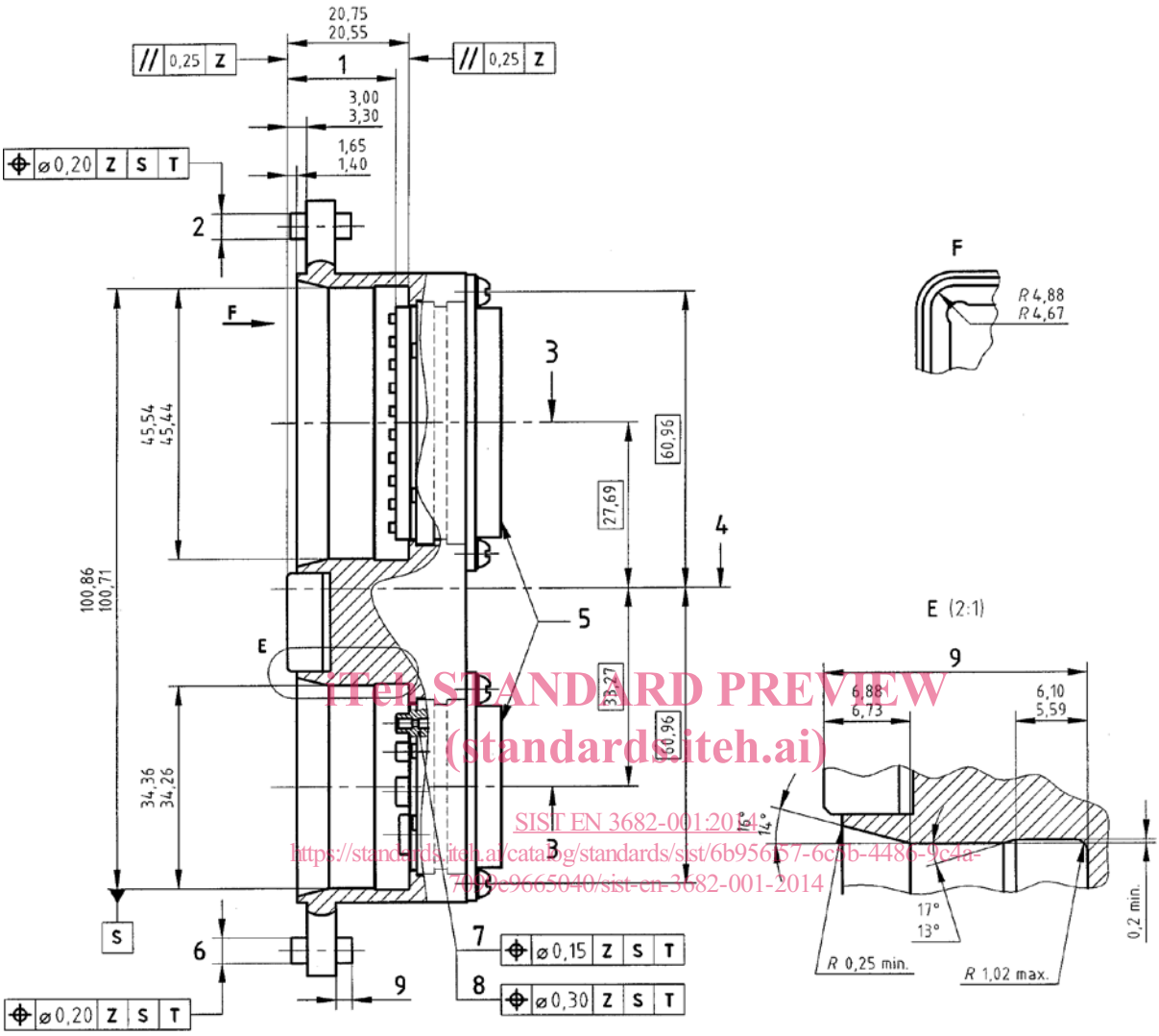

Key

1 18,57 / 18,37 for size 22 socket inserts

2 Boss (twice) Ø 3,99 / Ø 3,91

3 Centre line insert

4 Center line B

5 Insert assembly

6 Boss (twice) Ø 4,78 / Ø 4,70

7 Type all size 22 contact cavities (see Table 11)

8 Type all other size contact cavities

9 21,03 / 20,83 for other size pin inserts - To face of rigid

Insert except 1-126 and 2-62Q2 where the distance is 18,37 / 18,57

Figure 3

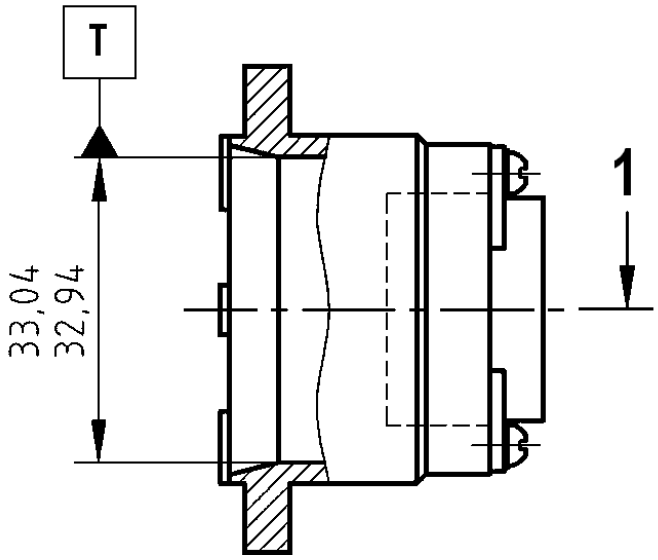

Key

1 Centre line T

Figure 4

Table 2

DATUM T	DATUM S					
	100,71	100,76	100,79	100,81	100,84	100,86
32,94	0,30	0,30	0,28	0,25	0,23	0,20
32,97	0,28	0,28	0,25	0,23	0,23	0,20
32,99	0,25	0,25	0,23	0,23	0,20	0,18
33,02	0,23	0,23	0,23	0,20	0,18	0,18
33,04	0,20	0,20	0,20	0,18	0,18	0,15

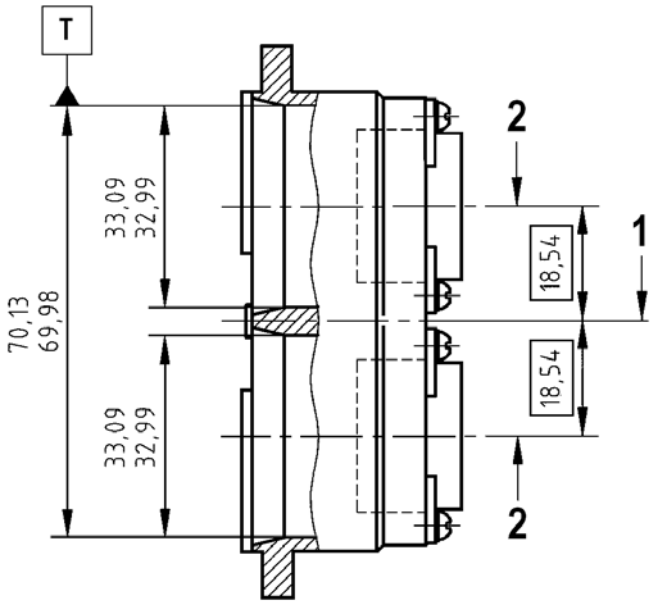

Key

1 Centre line T

2 Centre line insert

Figure 5

Table 3

DATUM T	DATUM S					
	100,71	100,76	100,79	100,81	100,84	100,86
69,98	0,30	0,30	0,28	0,25	0,23	0,20
70,03	0,30	0,30	0,28	0,25	0,23	0,20
70,05	0,28	0,28	0,25	0,23	0,23	0,20
70,08	0,25	0,25	0,23	0,23	0,20	0,18
70,10	0,23	0,23	0,23	0,20	0,18	0,18
70,13	0,20	0,20	0,20	0,18	0,18	0,15

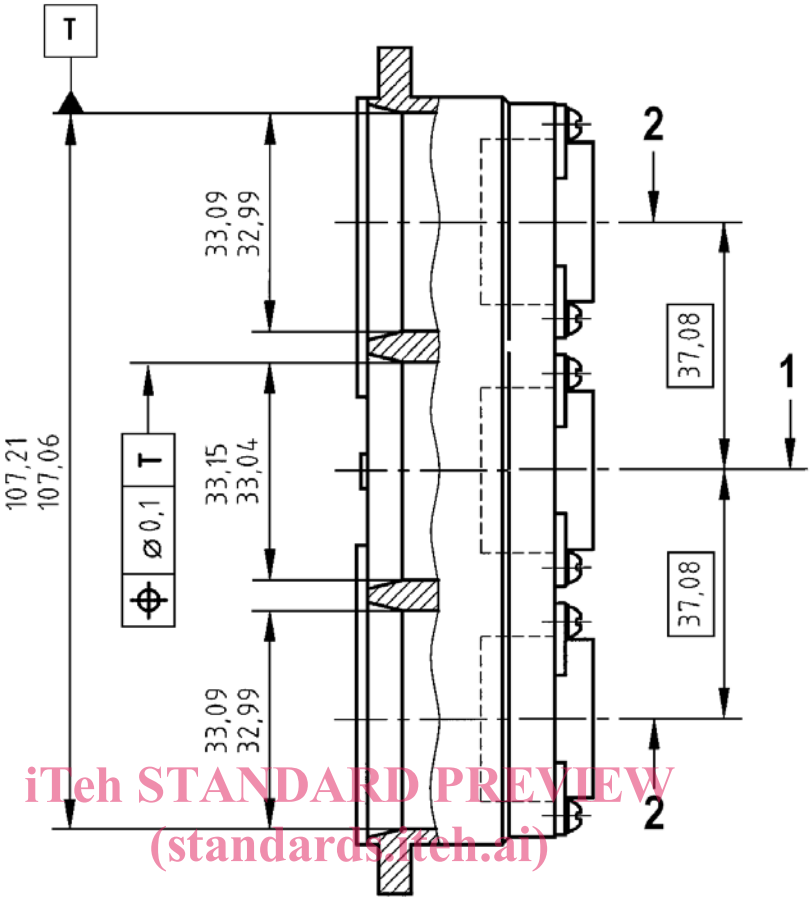

Key

1 Centre line T

2 Centre line insert

Figure 6

Table 4

DATUM T	DATUM S					
	100,71	**100,76**	**100,79**	**100,81**	**100,84**	**100,86**
107,06	0,30	0,30	0,28	0,25	0,23	0,20
107,11	0,30	0,30	0,28	0,25	0,23	0,20
107,14	0,28	0,28	0,25	0,23	0,23	0,20
107,16	0,25	0,25	0,23	0,23	0,20	0,18
107,19	0,23	0,23	0,23	0,20	0,18	0,18
107,21	0,20	0,20	0,20	0,18	0,18	0,15