# SLOVENSKI STANDARD
# SIST EN 12572-2:2017

**01-marec-2017**

**Nadomešča:**
**SIST EN 12572-2:2009**

---

**Umetne plezalne stene - 2. del: Varnostne zahteve in preskusne metode za balvanske stene**

Artificial climbing structures - Part 2: Safety requirements and test methods for bouldering walls

Künstliche Kletteranlagen - Teil 2: Sicherheitstechnische Anforderungen und Prüfverfahren für Boulderwände



Structures artificielles d'escalade - Partie 2 : Exigences de sécurité et méthodes d'essai relatives aux pans et blocs d'escalade

**Ta slovenski standard je istoveten z: EN 12572-2:2017**

---

**ICS:**

| | | |
|---|---|---|
| 97.220.10 | Športni objekti | Sports facilities |

**SIST EN 12572-2:2017** **en,fr,de**

EUROPEAN STANDARD

NORME EUROPÉENNE

EUROPÄISCHE NORM

# EN 12572-2

January 2017

ICS 97.220.10

Supersedes EN 12572-2:2008

English Version

# Artificial climbing structures - Part 2: Safety requirements and test methods for bouldering walls

Structures artificielles d'escalade - Partie 2 : Exigences de sécurité et méthodes d'essai relatives aux pans et blocs d'escalade

Künstliche Kletteranlagen - Teil 2: Sicherheitstechnische Anforderungen und Prüfverfahren für Boulderwände

This European Standard was approved by CEN on 29 October 2016.

CEN members are bound to comply with the CEN/CENELEC Internal Regulations which stipulate the conditions for giving this European Standard the status of a national standard without any alteration. Up-to-date lists and bibliographical references concerning such national standards may be obtained on application to the CEN-CENELEC Management Centre or to any CEN member.

This European Standard exists in three official versions (English, French, German). A version in any other language made by translation under the responsibility of a CEN member into its own language and notified to the CEN-CENELEC Management Centre has the same status as the official versions.



CEN members are the national standards bodies of Austria, Belgium, Bulgaria, Croatia, Cyprus, Czech Republic, Denmark, Estonia, Finland, Former Yugoslav Republic of Macedonia, France, Germany, Greece, Hungary, Iceland, Ireland, Italy, Latvia, Lithuania, Luxembourg, Malta, Netherlands, Norway, Poland, Portugal, Romania, Serbia, Slovakia, Slovenia, Spain, Sweden, Switzerland, Turkey and United Kingdom.



EUROPEAN COMMITTEE FOR STANDARDIZATION
COMITÉ EUROPÉEN DE NORMALISATION
EUROPÄISCHES KOMITEE FÜR NORMUNG

**CEN-CENELEC Management Centre: Avenue Marnix 17, B-1000 Brussels**

# Contents

Page

European foreword ... 3
1 Scope ... 4
2 Normative references ... 4
3 Terms and definitions ... 4
4 Safety requirements and test methods ... 5
4.1 Maximum height for bouldering ... 5
4.2 Impact absorbing material ... 5
4.2.1 General ... 5
4.2.2 Impact attenuation ... 5
4.3 Impact area ... 6
4.3.1 Size of the impact area ... 6
4.3.2 Position of foam safety mats ... 7
4.4 Connection of modular foam safety mat elements ... 8
4.5 Structural integrity ... 8
4.6 Impact resistance and deflection of surface elements ... 8
4.7 Panel insert resistance ... 9
4.8 Falling space ... 9
4.9 Bouldering wall surfaces ... 9
5 Marking ... 9
6 Instruction manual ... 10
7 Technical documentation of the bouldering wall ... 10
Annex A (normative) Effects ... 11
Annex B (normative) Method of calculating of structural integrity and stability ... 13
Annex C (normative) Testing of shock absorbing surfaces ... 15
Annex D (normative) Test of surface elements ... 16
Annex E (normative) Panel insert resistance test ... 19
Annex F (normative) Inspection and maintenance ... 21
Annex G (normative) Testing of the impact area connecting system ... 23
Bibliography ... 25

## European foreword

This document (EN 12572-2:2017) has been prepared by Technical Committee CEN/TC 136 "Sports, playground and other recreational facilities and equipment", the secretariat of which is held by DIN.

This European Standard shall be given the status of a national standard, either by publication of an identical text or by endorsement, at the latest by July 2017, and conflicting national standards shall be withdrawn at the latest by July 2017.

Attention is drawn to the possibility that some of the elements of this document may be the subject of patent rights. CEN shall not be held responsible for identifying any or all such patent rights.

This document supersedes EN 12572-2:2008.

This standard EN 12572, *Artificial climbing structures*, consists of the following parts:

— *Part 1: Safety requirements and test methods for ACS with protection points*

— *Part 2: Safety requirements and test methods for bouldering walls*

— *Part 3: Safety requirements and test methods for climbing holds*



The following changes have been made in comparison with EN 12572-2:2008:

— Table regarding "Shock absorbing" has been added;

— Table regarding "Size of the impact area" has been added;



— Test for shock absorbing surfaces has been added;

— Structural integrity and impact resistance modified

According to the CEN-CENELEC Internal Regulations, the national standards organisations of the following countries are bound to implement this European Standard: Austria, Belgium, Bulgaria, Croatia, Cyprus, Czech Republic, Denmark, Estonia, Finland, Former Yugoslav Republic of Macedonia, France, Germany, Greece, Hungary, Iceland, Ireland, Italy, Latvia, Lithuania, Luxembourg, Malta, Netherlands, Norway, Poland, Portugal, Romania, Serbia, Slovakia, Slovenia, Spain, Sweden, Switzerland, Turkey and the United Kingdom.

# 1 Scope

This European Standard specifies the safety requirements and calculation methods for bouldering walls, including the safety zone.

This European Standard is applicable when the bouldering is in normal use.

This European Standard is not applicable to ice climbing, dry tooling, playground equipment and deep water soloing.

# 2 Normative references

The following documents, in whole or in part, are normatively referenced in this document and are indispensable for its application. For dated references, only the edition cited applies. For undated references, the latest edition of the referenced document (including any amendments) applies.

EN 1991-1-3, *Eurocode 1: - Actions on structures - Part 1-3: General actions - Snow loads*

EN 1991-1-4, *Eurocode 1: Actions on structures - Part 1-4: General actions - Wind actions*

EN 1991-1-5, *Eurocode 1: Actions on structures - Part 1-5: General actions - Thermal actions*

EN 12503-4:2016, *Sports mats — Part 4: Determination of shock absorption*



EN 1998-1, *Eurocode 8: Design of structures for earthquake resistance - Part 1: General rules, seismic actions and rules for buildings*



# 3 Terms and definitions

For the purposes of this document, the following terms and definitions apply.

**3.1**
**artificial climbing structure**
**(ACS)**
sports equipment consisting of a purpose-built climbing structure, which exhibits various construction characteristics, and is designed for various uses in climbing objectives and is not reserved for a particular group

**3.2**
**bouldering wall**
artificial climbing structure allowing climbing without protection points including a falling space and impact area

**3.3**
**characteristic load**
maximum load that can be generated in normal use

Note 1 to entry: See EN 12572–1.

**3.4**
**falling space**
space around the bouldering wall that can be occupied by a user during a fall

**3.5**
**impact area**
surface on which a user lands after falling

**3.6**
**bouldering wall height**
vertical height measured between the highest possible point a climber can hold and the top of the impact area

**3.7**
**impact absorbing material**
material beneath a bouldering wall filling the impact area designed to absorb the energy of a fall

EXAMPLE Water, air cushion, shingle and foam safety mats.

# 4 Safety requirements and test methods

## 4.1 Maximum height for bouldering

The maximum height for bouldering shall be 4 500 mm. It shall be up to 4 000 mm high, where it is possible to stand on the top.

## 4.2 Impact absorbing material



### 4.2.1 General

The impact absorbing material shall be adapted to accept a fall from at least the maximum height of the bouldering wall at the bottom of which it is installed.



### 4.2.2 Impact attenuation

#### 4.2.2.1 Impact attenuating capacity for foam safety mats

The most common indoor impact absorbing materials are foam safety mats.

When tested according to Annex C, the boulder mat shall comply with the values of Table 1.

**Table 1 — Shock absorption**

| Peak deceleration<br>g (1 g = 9,81 $ms^{-2}$) | Deflection<br>% | Resilience<br>% |
|---|---|---|
| ≥ 15 and ≤ 25 | ≤ 80 | ≤ 15 |

#### 4.2.2.2 Impact attenuating capacity for shingle

One of the most common outdoor impact absorbing materials is shingle.

When shingle is used it shall be washed, rounded and be between 8 mm and 16 mm in diameter and have a minimum depth of 400 mm.

For bouldering wall heights greater than 3 000 mm, as the impact attenuating capacity of shingle may not be sufficient to safely absorb all falls, a notice shall be erected at the bouldering wall site warning climbers that the use of this bouldering wall is more like climbing at a natural site, and therefore they should use other regular techniques for protecting each other such as: hand spotting, use of crash pads (individual protection mats) etc.

This information shall be visible and accessible to all.

#### 4.2.2.3 Impact attenuating capacity for other types of impact absorbing material

For other types of material such as water, air cushion, net, rubber, bark etc. relevant standards for the selected material should be followed where applicable.

## 4.3 Impact area

### 4.3.1 Size of the impact area

Extent of the impact area L:

— if the bouldering wall height is equal to or less than 3 000 mm, the ground projection of the bouldering wall shall be extended by L1 ≥ 2 000 mm;

— if the height of the bouldering wall is greater than 3 000 mm, the ground projection of the bouldering wall shall be extended by L1 ≥ 2 500 mm, see Figure 1.

— if the bouldering wall is vertical or less than 10° overhanging with no holds on the side walls, the impact area either side of the bouldering wall L2 can be reduced to 50 % of the bouldering wall height or 1 500 mm.



**Table 2 — Size of the impact area**

| Height of the wall | Size of the impact area in front of the climbing wall | Size of the side impact area for walls ≤ 10° and no holds on the side | Size of the side impact area for walls > 10° |
|---|---|---|---|
| H | L1 | L2 | L2 |
| 0 to ≤ 3 000 mm | 2 000 mm | 50 % of the height | 50 % of the height |
| > 3 000 mm to ≤ 4 500 mm | 2 500 mm | 1 500 mm | |
| NOTE Holds in the area A given in Figure 1 are considered as a part of the front wall. | | | |

Dimensions in millimetres

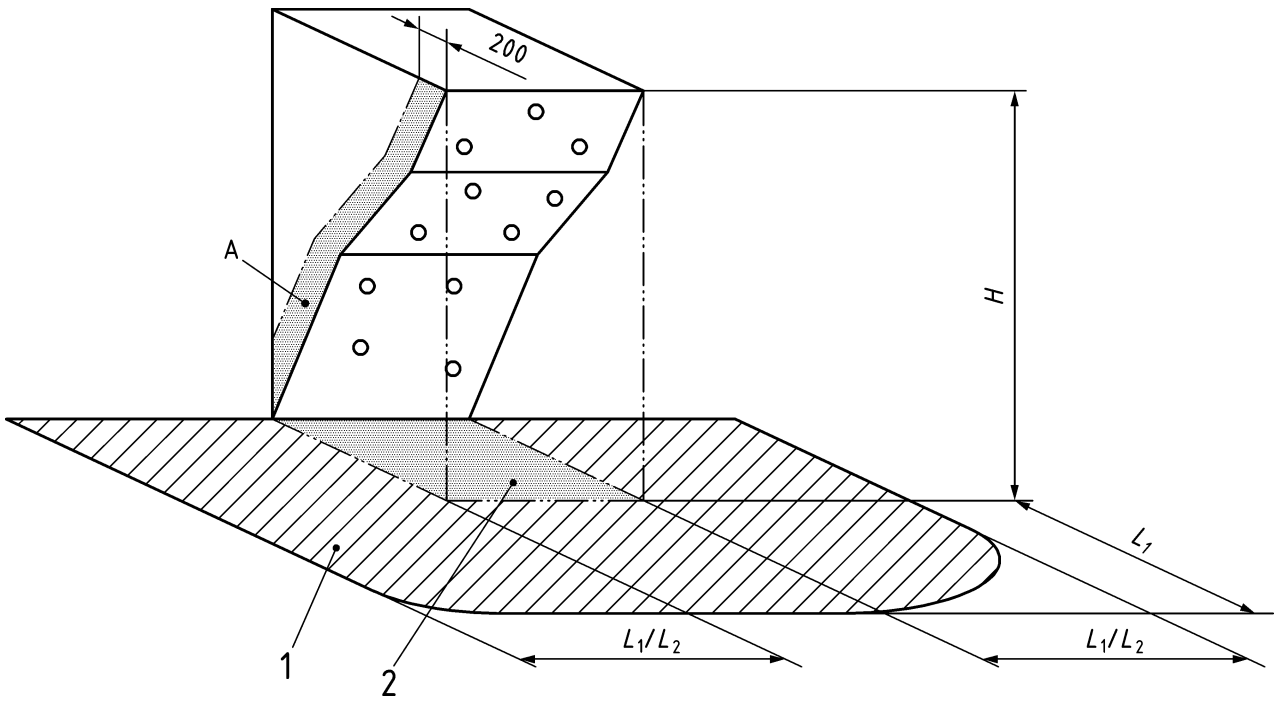


**Key**



1 top of the impact area

2 projection of the bouldering wall

$H$ height of the highest possible holding point



$L_1$ length added to the ground projection of the bouldering wall in front of the bouldering wall

$L_2$ additional width of the impact area (under special circumstances)

A lateral surface where climbing is possible considered as a part of the front wall

**Figure 1 — Example of the dimensions of the impact area at the base of a bouldering wall**

If a bouldering wall constructor can prevent through considered design the possibility of a climber falling to the side of the bouldering wall, the extent of the impact area may be reduced accordingly.

### 4.3.2 Position of foam safety mats

Foam safety mats shall touch the base of the bouldering wall and shall be prevented from moving while in use, see Figure 2a).

For steeply overhanging bouldering walls it is acceptable to use a thin or sloping mat installed between the base of a bouldering wall and the main foam safety mat to prevent injuries according to Figure 2b).

Dimensions in millimetres

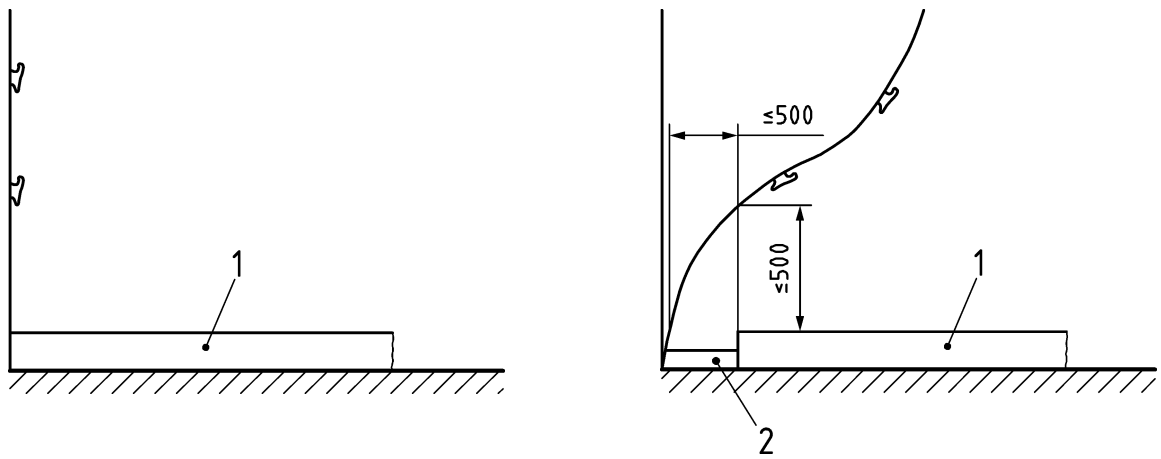


**a) Position of foam safety mat**

**b) Optional foam safety mat position for "steeply overhanging bouldering walls"**

**Key**

1 main foam safety mat

2 thin or sloping mat

**Figure 2 — Position of the impact area**



## 4.4 Connection of modular foam safety mat elements

If the impact absorbing materials consist of modular elements, the sections shall be securely connected together or the gaps shall be covered so that it is impossible for the climber to enter into the gaps between modular elements. If the impact absorbing materials are beneath a continuous surface cover, the cover shall be in sufficient tension to hold the foam safety mats closely together.

Informative Annex G describes one possible method of testing modular foam safety mat element connections.

## 4.5 Structural integrity

The structural integrity, including stability, of a bouldering wall shall be justified by calculation using the characteristic loads given in Table A.1 in accordance with Annexes A and B.

Panels shall not overly deflect (see D.5).

In all cases where a bouldering wall transmits loads to an existing structure (building, concrete platforms, ground) it shall be ensured that the structure can safely accommodate the loads imposed by the bouldering wall.

## 4.6 Impact resistance and deflection of surface elements

When tested in accordance with Annex D there shall be no breaking or splitting of the surface element.

The deflection of the panels shall be calculated by using the load 0,8 kN (see Annex A) or be tested in accordance with Annex D, D.5.

When fixed according to the manufacturer's specification, the maximum deflection of the surface element shall not exceed $l/100$,

where

$l$ is the maximum length between the fixations of the surface

### 4.7 Panel insert resistance

To evaluate the panel insert concerning the resistance to breakage while mounting the climbing holds onto the wall or during climbing use, the panel inserts shall be tested in accordance with Annex E.

After test step c) any resulting deformation shall not exceed 0,5 mm at 1,2 kN.

After procedure e) there shall be no pull out of the panel insert.

Five samples (panel-insert combination) shall be tested.

### 4.8 Falling space

Within the falling space there shall not be any exposed obstacles or edges which could lead to a hazard to the user. This does not apply to climbing structures and other obstacle-free surfaces or walls capable of withstanding accidental impacts.

### 4.9 Bouldering wall surfaces

All reachable parts of the bouldering wall surface shall be free of sharp edges and burrs. Edges shall be rounded by a minimum radius of 1 mm, or chamfered at 45°mm × 1 mm. There shall be no gaps between 8 mm and 25 mm and with a depth greater than 15 mm which can lead to entrapment, unless it is a feature specifically designed for climbing. Insert holes in the climbing surface of the bouldering wall for attaching holds are excluded.



## 5 Marking

All bouldering walls shall be marked in a clearly visible place with a notice detailing:

a) name or trademark of the manufacturer;

b) name of importer or supplier;

c) number and date of this European Standard, i.e. EN 12572-2:2017;

d) date of installation of the bouldering wall (the year with 4 figures);

e) date of the next main inspection (the year with 4 figures);

f) that this is a specifically designed bouldering wall for climbing and is not playground equipment;

NOTE This principally concerns external bouldering walls in public places.

g) in case of shingle or other similar impact absorbing material, safety marking in accordance with 4.2.2.2.