SLOVENSKI STANDARD
oSIST prEN 14150:2017

01-september-2017

Geosintetične ovire - Ugotavljanje prepustnosti za tekočine

Geosynthetic barriers - Determination of permeability to liquids

Geosynthetische Dichtungsbahnen - Bestimmung der Flüssigkeitsdurchlässigkeit

Géomembranes - Détermination de la perméabilité aux liquides

Ta slovenski standard je istoveten z: prEN 14150

ICS:

59.080.70 Geotekstilije Geotextiles

oSIST prEN 14150:2017 en

EUROPEAN STANDARD

NORME EUROPÉENNE

EUROPÄISCHE NORM

DRAFT
prEN 14150

August 2017

ICS 59.080.70

Will supersede EN 14150:2006

English Version

Geosynthetic barriers - Determination of permeability to liquids

Géomembranes - Détermination de la perméabilité aux liquides

Geosynthetische Dichtungsbahnen - Bestimmung der Flüssigkeitsdurchlässigkeit

This draft European Standard is submitted to CEN members for enquiry. It has been drawn up by the Technical Committee CEN/TC 189.

If this draft becomes a European Standard, CEN members are bound to comply with the CEN/CENELEC Internal Regulations which stipulate the conditions for giving this European Standard the status of a national standard without any alteration.

This draft European Standard was established by CEN in three official versions (English, French, German). A version in any other language made by translation under the responsibility of a CEN member into its own language and notified to the CEN-CENELEC Management Centre has the same status as the official versions.

CEN members are the national standards bodies of Austria, Belgium, Bulgaria, Croatia, Cyprus, Czech Republic, Denmark, Estonia, Finland, Former Yugoslav Republic of Macedonia, France, Germany, Greece, Hungary, Iceland, Ireland, Italy, Latvia, Lithuania, Luxembourg, Malta, Netherlands, Norway, Poland, Portugal, Romania, Serbia, Slovakia, Slovenia, Spain, Sweden, Switzerland, Turkey and United Kingdom.

Recipients of this draft are invited to submit, with their comments, notification of any relevant patent rights of which they are aware and to provide supporting documentation.

Warning : This document is not a European Standard. It is distributed for review and comments. It is subject to change without notice and shall not be referred to as a European Standard.

EUROPEAN COMMITTEE FOR STANDARDIZATION
COMITÉ EUROPÉEN DE NORMALISATION
EUROPÄISCHES KOMITEE FÜR NORMUNG

CEN-CENELEC Management Centre: Avenue Marnix 17, B-1000 Brussels

Ref. No. prEN 14150:2017 E

Contents

Page

European foreword

This document (prEN 14150:2017) has been prepared by Technical Committee CEN/TC 189 "Geosynthetics", the secretariat of which is held by NBN.

This document is currently submitted to the CEN Enquiry.

This document has been prepared under a mandate given to CEN by the European Commission and the European Free Trade Association

This document will supersede EN 14150:2006.

1 Scope

This European Standard specifies a method for measuring the steady-state liquid flow through a geosynthetic barrier, used to contain liquids in long-term applications.

The test method and described apparatus allow the measurement of flows accurately down to 10^{-6} $m^3/m^2/day$. In particular circumstances where testing indicates that values obtained for a geosynthetic barrier lie below the threshold of sensitivity of this test method, then the value of liquid flow is declared as being less than10^{-6} $m^3/m^2/day$.

Due to its long duration this test method is not suitable for production control testing.

Clay geosynthetic barriers cannot be tested with this apparatus.

2 Normative references

There are no normative references in this document.

3 Terms and definitions

No terms and definitions are listed in this document.

ISO and IEC maintain terminological databases for use in standardization at the following addresses:

- IEC Electropedia: available at http://www.electropedia.org/
- ISO Online browsing platform: available at http://www.iso.org/obp

4 Principle

A differential hydraulic pressure is applied between the two sides of a geosynthetic barrier. It is kept constant during the test at 100 kPa, the upstream pressure being set to 150 kPa, and the downstream pressure to 50 kPa.

The flow through the geosynthetic barrier is calculated from the variations of the liquid volume measured on both sides of the geosynthetic barrier.

NOTE This test is conducted with water, but can also be performed with other liquids, providing chemical resistance and compatibility of the apparatus is ensured.

In the light of laboratory experience, it is recommended that the test procedural improvement and equipment enhancement of the sensitivity threshold of the test procedure be reviewed and the applicability of the test procedure to the product permeability assessed at regular intervals, not exceeding 12 months.

Other pressure levels may be applied with the agreement of all concerned persons or parties. In this case it is recommended that the pressure levels applied be described in the test report

5 Apparatus

5.1 Cell

The two-part cell (see Figure 1) shall resist oxidation and hydraulic pressure applied along the test. In each part of the cell, a cavity allows to apply a hydraulic pressure. A porous disc resisting oxidation placed in the downstream cavity prevents deformations of the geosynthetic barrier.

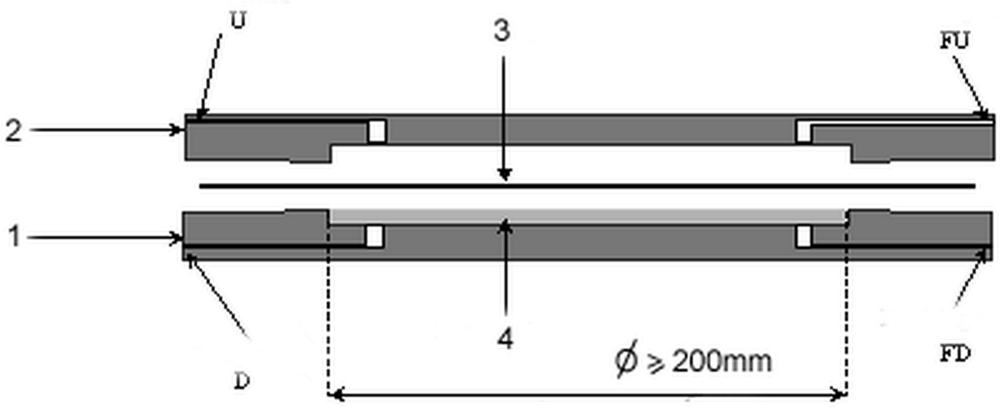

Key

1	downstream part	U	water inlet
2	upstream part	D	water outlet
3	geosynthetic barrier	FU	flushing valve upstream
4	porous plate	FD	flushing valve downstream

Figure 1 — Schematic representation of a test cell

The cell shall be designed to clamp the specimen without any leaks. There is no tightening system necessary, as clamping between flat surfaces is usually sufficient. For some materials, a sealant may be necessary. Any sealant non-sensitive to water and avoiding leaks can be used. In the case of bituminous geosynthetic barriers, a bitumen rubber sealant can be used.

The cavities shall be constructed in such a way that the exposed diameter of the specimen be equal to or greater than 200 mm. This diameter shall be measured with an accuracy equal to or better than 1 mm.

The cell is equipped with a liquid inlet on the upstream part (U-valve) and a liquid outlet on the downstream part (D-valve) and flushing valves on each part (FU- and FD-valves).

The cell shall be oriented vertically to allow an easier and better air flushing. The flushing valves (FU and FD) shall be placed on top of the cell and the inlet (U) and outlet (D) shall be on the bottom of the cell.

NOTE The cell can also include, on both parts, a ring-shaped control cavity. In this case the downstream control cavity will be equipped with a porous ring-shaped plate. Each ring-shaped cavity will be connected to an independent volume measuring device and a pressure delivery system, in order to apply the same pressure as in the corresponding measuring cavity. These ring-shaped cavities are there to minimize deformation in the measuring cavity.

5.2 Volume measuring devices and pressure delivery system

These two devices are generally associated.

The volume measuring equipment shall be able to measure liquid flows through the geosynthetic barrier smaller than 10^{-6} $m^3/m^2/d$.

The accuracy of the volume measurement shall be at least 10^{-8} m^3.

The accuracy of the pressure applied on each side of the geosynthetic barrier shall be ± 2 kPa.

The volume measurements can be achieved using capillary tubes (Type A device) or pressure-volume controllers (Type B device).

- Type A (see Figure 2): 0,3 m long tubes can be used. To reduce the effects of evaporation the tube diameter shall be less than 3 mm. The pressure is applied by means of air pressure in capillary tubes and controlled with a regulator. A liquid vessel connected to the cell, between each capillary tube and the cell, allows the cavities to be filled before the test and enables the adjustment of liquid levels in capillary tubes during the test. Due to temperature effects on volume, tests performed with this kind of apparatus shall be carried out in a thermostatic chamber at (23 ± 0,2) °C.

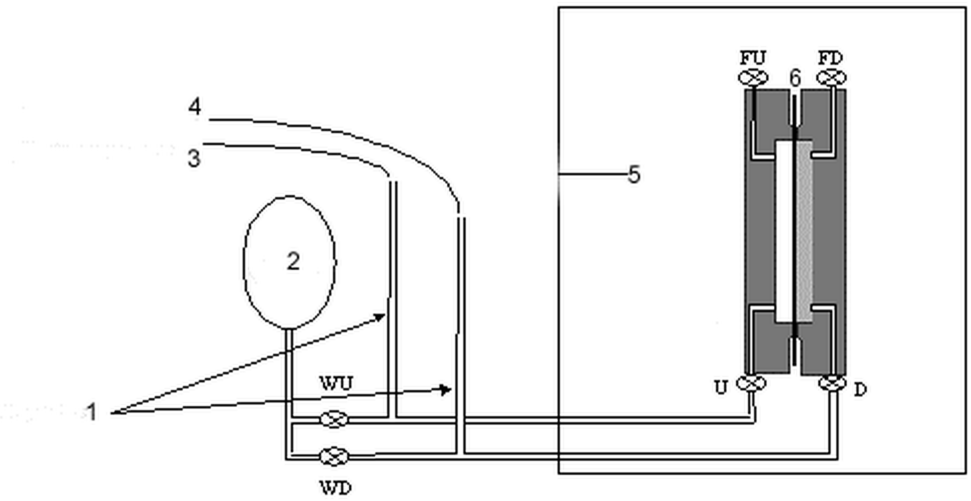

Key

1	capillary tubes	WU	water regulator valve upstream
2	vessel	WD	water regulator valve downstream
3	upstream pressure	FU	flushing valve upstream
4	downstream pressure	FD	flushing valve downstream
5	thermostatic chamber (to ± 0,1 °C)	U	water inlet
6	geosynthetic barrier	D	water outlet

Figure 2 — Schematic representation of a Type A volume measuring device

- Type B (see Figure 3): this device allows the application of a constant pressure when measuring the volume. It consists of a cylinder in which a piston slides. A numerically controlled motor enables the application of the required pressure by moving the piston. A pressure sensor included in the system measures the pressure. The piston displacement corresponds to a variation of the volume of liquid. The volume of the controllers shall be greater than 10^{-4} m^3.

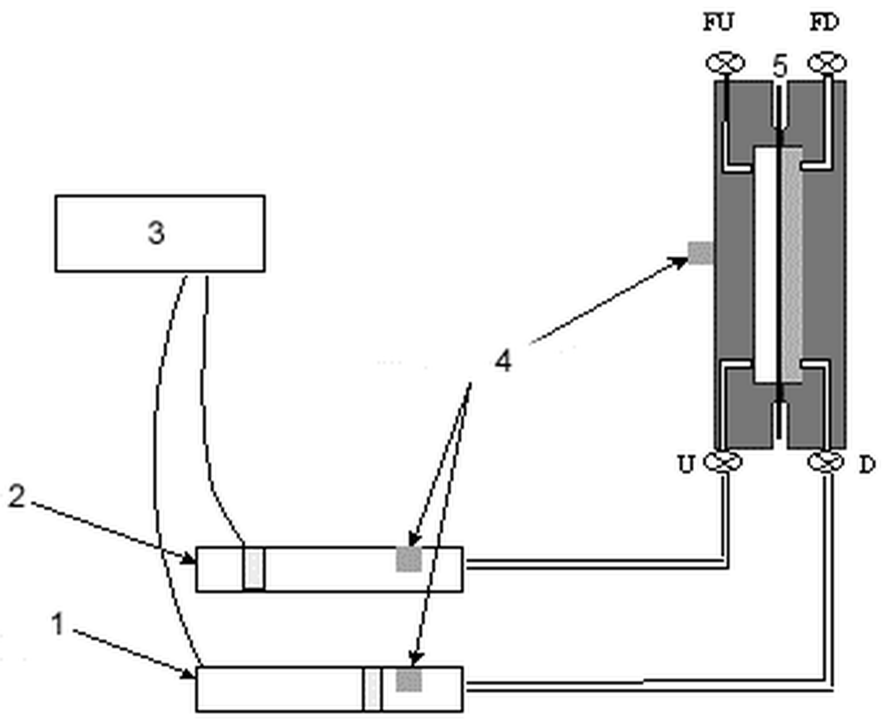

Key

1	downstream controller	U	water inlet
2	upstream controller	D	water outlet
3	computer	FU	flushing valve upstream
4	temperature transducers	FD	flushing valve downstream
5	geosynthetic barrier		

Figure 3 — Schematic representation of a Type B volume measuring device

5.3 Liquid supply

It is recommended to use de-aired water (less than 1 mg/l of dissolved oxygen). De-aired liquid is necessary to minimize variations of volume due to temperature variations.

If the test is conducted with other liquids, it is recommended that volatility and safety problems be taken into account.

5.4 Temperature control

When the test is carried out using a type A device then this shall be performed under a temperature of (23 ± 0,2) °C (using a thermostatic chamber). When the test is carried out using a type B device then a temperature of (23 ± 1) °C (in a controlled temperature room) shall be used.

With a type B device, at least three temperature transducers, placed on each pressure-volume controller and on the cell, shall be used. Temperature measurements will then be used to correct volume variations if required (see 8). The temperature is measured with a precision of 0,2 °C.

6 Specimens

The specimens shall be clean and free from any visible defects.

If the geosynthetic barrier has a textured surface, it will be necessary to smooth the surface in the clamping area to achieve a good seating. In addition the uniformity of texturing shall be such that no undue deformation of the geosynthetic barrier takes place during the test. If the clamping area cannot be correctly machined to achieve a good seal or if the texturing causes deformation during the test, then the specimen shall not be submitted to the test.

The specimen shall be immersed in the test liquid at room temperature for at least 24 h prior to the commencement of the test, in order to reduce testing time.

7 Procedure

7.1 General

The upstream pressure shall be maintained higher than the downstream pressure during the whole duration of the test, and between each stage.

7.2 Installation

7.2.1 General

The cell shall be dry and clean from oils. The valves U, D, FU and FD shall be open.

Place the specimen in the centre of the downstream part of the cell placed horizontally.

Place the upstream part of the cell to clamp the geosynthetic barrier to ensure perfect contact and close the cell.

Place the cell in the testing position and apply one of the following procedures.

NOTE The top side of the geosynthetic barrier is normally subjected to high pressure.

For tunnel membranes with signal layer, the side with signal layer shall be subjected to low pressure.

7.2.2 Type A volume measuring devices:

- Connect the cell to the volume measuring devices;
- open U and the vessel valve WU and slowly fill the upstream cavity with liquid coming directly from the vessel. Continue filling until air previously in the cell is flushed out;
- close FU and establish a high level of liquid in the capillary tube where the level of liquid will decrease;
- close WU and apply a 10 kPa pressure in the upstream cavity;
- open D and the liquid vessel valve WD and slowly fill the downstream cavity with liquid; continue filling until all air previously in the cell is flushed out;

  NOTE A better result can be obtained by vacuuming air from the downstream cavity with valve D closed and refilling the upstream cavity afterwards if necessary.

- close WD and FD;
- during both preparation and test stages, regularly adjust the level of liquid in both tubes. It may be necessary to fill the upstream capillary tube and empty the downstream capillary tube where the