SLOVENSKI STANDARD
SIST ETS 300 836-4 E1:2006

01-februar-2006

Širokopasovna radijska dostopovna omrežja (BRAN) – Zelo zmogljivo radijsko lokalno omrežje (HIPERLAN), tip 1 – Specifikacija za preskušanje skladnosti – 4. del: Abstraktni preskušalni niz (ATS) – Specifikacija

Broadband Radio Access Networks (BRAN); HIgh PErformance Radio Local Area Network (HIPERLAN) Type 1; Conformance testing specification; Part 4: Abstract Test Suite (ATS) specification

iTeh STANDARD PREVIEW
(standards.iteh.ai)
SIST ETS 300 836-4 E1:2006
https://standards.iteh.ai/catalog/standards/sist/d883bd29-8c1a-44c8-8ce7-3edc398797d3/sist-ets-300-836-4-e1-2006

Ta slovenski standard je istoveten z: **ETS 300 836-4 Edition 1**

ICS:

33.060.01	Radijske komunikacije na splošno	Radiocommunications in general
35.110	Omreževanje	Networking

SIST ETS 300 836-4 E1:2006 **en**

2003-01.Slovenski inštitut za standardizacijo. Razmnoževanje celote ali delov tega standarda ni dovoljeno.

SIST ETS 300 836-4 E1:2006

iTeh STANDARD PREVIEW
(standards.iteh.ai)

SIST ETS 300 836-4 E1:2006
https://standards.iteh.ai/catalog/standards/sist/d883bd29-8c1a-44c8-8ce7-3edc398797d3/sist-ets-300-836-4-e1-2006

EUROPEAN TELECOMMUNICATION STANDARD

ETS 300 836-4

May 1998

Source: BRAN

Reference: DE/BRAN-10-02C

ICS: 33.020

Key words: HIPERLAN, LAN, radio, testing

Broadband Radio Access Networks (BRAN); HIgh PErformance Radio Local Area Network (HIPERLAN) Type 1; Conformance testing specification; Part 4: Abstract Test Suite (ATS) specification

iTeh STANDARD PREVIEW
(standards.iteh.ai)
SIST ETS 300 836-4 E1:2006
https://standards.iteh.ai/catalog/standards/sist/3edc398797d3/sist-ets-300-836-4-e1-2006

ETSI

European Telecommunications Standards Institute

ETSI Secretariat

Postal address: F-06921 Sophia Antipolis CEDEX - FRANCE
Office address: 650 Route des Lucioles - Sophia Antipolis - Valbonne - FRANCE
Internet: secretariat@etsi.fr - http://www.etsi.fr - http://www.etsi.org

Tel.: +33 4 92 94 42 00 - Fax: +33 4 93 65 47 16

Copyright Notification: No part may be reproduced except as authorized by written permission. The copyright and the foregoing restriction extend to reproduction in all media.

© European Telecommunications Standards Institute 1998. All rights reserved.

iTeh STANDARD PREVIEW
(standards.iteh.ai)
SIST ETS 300 836-4 E1:2006
https://standards.iteh.ai/catalog/standards/sist/d883bd29-8c1a-44c8-8ce7-3edc398797d3/sist-ets-300-836-4-e1-2006

Whilst every care has been taken in the preparation and publication of this document, errors in content, typographical or otherwise, may occur. If you have comments concerning its accuracy, please write to "ETSI Editing and Committee Support Dept." at the address shown on the title page.

Contents

Foreword 7

1 Scope 9

2 Normative references 9

3 Definitions and abbreviations 10
3.1 Definitions 10
3.2 Abbreviations 10

4 Abstract Test Method (ATM) 11
4.1 ATM for MAC protocol 11
4.1.1 Co-ordinated test method 11
4.1.2 Remote test method 11
4.1.3 Choice of MAC ATM 12
4.2 ATM for CAC protocol 12

5 Requirements on underlying layers for testing 13
5.1 MAC testing 13
5.1.1 CAC service for MAC testing 13
5.1.2 CAC protocol for MAC testing 13
5.1.3 PHY protocol for MAC testing 15
5.2 CAC testing 15
5.2.1 PHY service interface for CAC testing 15
5.2.1.1 PHY service primitives 15
5.2.1.1.1 PH-UNITDATA-request (PH-UD-RQ) 15
5.2.1.1.2 PH-UNITDATA-confirm (PH-UD-CO) 15
5.2.1.1.3 PH-UNITDATA-indication (PH-UD-IN) 15
5.2.1.1.4 PH-START-request (PH-ST-RQ) 16
5.2.1.1.5 PH-START-indication (PH-ST-IN) 16
5.2.1.1.6 PH-END-request (PH-EN-RQ) 16
5.2.1.1.7 PH-END-indication (PH-EN-IN) 16
5.2.1.1.8 PH-RESET (PH-REST) 16
5.2.1.1.9 PH-CHANNEL (PH-CHAN) 16
5.2.1.2 Sequence of primitives 17

6 Untestable test purposes 19
6.1 MAC protocol 19
6.2 CAC protocol 20

7 ATS conventions 20
7.1 MAC ATS 20
7.1.1 Naming conventions 20
7.1.1.1 General 20
7.1.1.2 Timers 20
7.1.1.3 ASPs 20
7.1.1.3.1 Aliases for ASPs 21
7.1.1.4 PDUs 21
7.1.1.5 Constraints 21
7.1.1.5.1 ASPs 22
7.1.1.5.2 PDUs 22
7.1.2 Test steps and defaults 22
7.1.3 Use of ASN.1 22
7.1.3.1 ASN.1 types 23
7.1.3.2 ASN.1 encoding 23
7.2 CAC ATS 23
7.2.1 Description (in test suite overview) 23

iTeh STANDARD PREVIEW
(standards.iteh.ai)
SIST ETS 300 836-4-E1:2006
https://standards.iteh.ai/catalog/standards/sist/d883bd29-8c1a-44c9-8ee7-3edc398797d3/sist-ets-300-836-4-e1-2006

7.2.2 Declarations 23
7.2.2.1 Type definitions 23
7.2.2.2 Test suite operations 23
7.2.2.3 Test suite parameters 23
7.2.2.4 Selection expressions 23
7.2.2.5 Test suite constants 23
7.2.2.6 Test suite variables 24
7.2.2.7 Test case variables 24
7.2.2.8 PCOs 24
7.2.2.9 Timers 24
7.2.2.10 ASPs 24
7.2.2.11 PDUs 24
7.2.2.12 Aliases 24
7.2.3 Constraints 24
7.2.3.1 ASPs containing PDUs, PDUs and fields of PDUs 24
7.2.3.2 Other ASP constraints 25
7.2.4 Dynamic part 25
7.2.4.1 Labels 25
7.2.4.2 Test steps 26

8 ATS to TP map 26
8.1 Combined TPs 26

9 Conformance 26
9.1 PCTR conformance 26
9.2 PIXIT conformance 26
9.3 ATS conformance 27

Annex A (normative): Test Management Protocol (TMP) specification 28

A.1 TMP 28
A.1.1 Receipt of LR-TMPDU 28
A.1.2 Receipt of DT-TMPDU 28
A.1.3 Receipt of CL-TMPDU 28
A.1.4 Generation of LC-TMPDU 29
A.1.5 Generation of DT-TMPDU 29
A.1.6 TMPDU transmission 29

A.2 Test Management PDUs (TMPDUs) 30
A.2.1 TMPDUs received by the UT 30
A.2.1.1 LR-TMPDU 30
A.2.1.2 DT-TMPDU 30
A.2.1.3 CL-TMPDU 30
A.2.2 TMPDUs transmitted by the UT 31
A.2.2.1 LC-TMPDU 31
A.2.2.2 DT-TMPDU 31

Annex B (normative): MAC Protocol Conformance Test Report (PCTR) proforma 32

B.1 Identification summary 32
B.1.1 Protocol conformance test report 32
B.1.2 IUT identification 32
B.1.3 Testing environment 32
B.1.4 Limits and reservations 33
B.1.5 Comments 33

B.2 IUT conformance status 33

B.3 Static conformance summary 33

B.4 Dynamic conformance summary 33

B.5 Static conformance review report 34

iTeh STANDARD PREVIEW
(standards.iteh.ai)
SIST ETS 300 836-4 E1:2006
https://standards.iteh.ai/catalog/standards/sist/d883bd29-8c1a-44c8-8ce7-3edc398797d3/sist-ets-300-836-4-e1-2006

B.6 Test campaign report 34

B.7 Observations 38

Annex C (normative): Partial PIXIT proforma for MAC 39

C.1 Identification summary 39

C.2 Abstract test suite summary 39

C.3 Test laboratory 40

C.4 Client (of the Test Laboratory) 40

C.5 SUT 41

C.6 Protocol information 41
C.6.1 Protocol identification 41
C.6.2 Addresses 42
C.6.3 Parameter values 43
C.6.4 Sending of PDUs by IUT 44

Annex D (normative): CAC PCTR proforma 45

D.1 Identification summary 45
D.1.1 Protocol conformance test report 45
D.1.2 IUT identification 45
D.1.3 Testing environment 45
D.1.4 Limits and reservations 46
D.1.5 Comments 46

D.2 IUT conformance status 46

D.3 Static conformance summary 46

D.4 Dynamic conformance summary 46

D.5 Static conformance review report 47

D.6 Test campaign report 47

D.7 Observations 50

Annex E (normative): Partial PIXIT proforma for CAC 51

E.1 Identification summary 51

E.2 Abstract test suite summary 51

E.3 Test laboratory 52

E.4 Client (of the Test Laboratory) 52

E.5 SUT 53

E.6 Protocol information 53
E.6.1 Protocol identification 53
E.6.2 Addresses 54
E.6.3 Parameter values 54
E.6.4 Sending of PDUs by IUT 54

Annex F (normative): Graphical Representation (GR) format of ATS 55

iTeh STANDARD PREVIEW
(standards.iteh.ai)
SIST ETS 300 836-4 E1:2006
https://standards.iteh.ai/catalog/standards/sist/d883bd29-8c1a-44c8-8ce7-3edc398797d3/sist-ets-300-836-4-e1-2006

F.1 GR for MAC ATS 55

F.2 GR for CAC ATS 55

Annex G (normative): Machine Processable (MP) format of ATS 56

G.1 MP for MAC ATS 56

G.2 MP for CAC ATS 56

History 57

iTeh STANDARD PREVIEW
(standards.iteh.ai)

SIST ETS 300 836-4 E1:2006
https://standards.iteh.ai/catalog/standards/sist/d883bd29-8c1a-44c8-8ce7-3edc398797d3/sist-ets-300-836-4-e1-2006

Foreword

This European Telecommunication Standard (ETS) has been produced by the ETSI Project Broadband Radio Access Networks (BRAN) of the European Telecommunications Standards Institute (ETSI).

This ETS consists of 4 parts as follows:

Part 1: "Radio type approval and Radio Frequency (RF) conformance test specification";

Part 2: "Protocol Implementation Conformance Statement (PICS) proforma specification";

Part 3: "Test Suite Structure and Test Purposes (TSS&TP) specification";

Part 4: "Abstract Test Suite (ATS) specification".

Transposition dates	
Date of adoption of this ETS:	1 May 1998
Date of latest announcement of this ETS (doa):	31 August 1998
Date of latest publication of new National Standard or endorsement of this ETS (dop/e):	28 February 1999
Date of withdrawal of any conflicting National Standard (dow):	28 February 1999

iTeh STANDARD PREVIEW
(standards.iteh.ai)
SIST ETS 300 836-4 E1:2006
https://standards.iteh.ai/catalog/standards/sist/d883bd29-8c1a-44c8-8ce7-3edc398797d3/sist-ets-300-836-4-e1-2006

Blank page

iTeh STANDARD PREVIEW
(standards.iteh.ai)
SIST ETS 300 836-4 E1:2006
https://standards.iteh.ai/catalog/standards/sist/d883bd29-8c1a-44c8-8ce7-3edc398797d3/sist-ets-300-836-4-e1-2006

1 Scope

This European Telecommunication Standard (ETS) specifies the Abstract Test Suite (ATS) for the Medium Access Control (MAC) and Channel Access Control (CAC) protocol parts of the HIgh PErformance Radio Local Area Network (HIPERLAN) Type 1 functional specification as specified in ETS 300 652 [1].

ETS 300 836-3 [8] specifies the Test Suite Structure and Test Purposes (TSS&TP) related to this ATS specification.

In this ETS, the term "HIPERLAN" is used to refer to HIPERLAN, Type 1.

2 Normative references

This ETS incorporates by dated and undated reference, provisions from other publications. These normative references are cited at the appropriate places in the text and the publications are listed hereafter. For dated references, subsequent amendments to or revisions of any of these publications apply to this ETS only when incorporated in it by amendment or revision. For undated references the latest edition of the publication referred to applies.

[1] ETS 300 652 (1996) + prA1 (1996): "Radio Equipment and Systems (RES); HIgh PErformance Radio Local Area Network (HIPERLAN); Type 1; Functional specification".

[2] ISO/IEC 9646-1 (1994): "Information technology - Open Systems Interconnection - Conformance testing methodology and framework - Part 1: General concepts".

[3] ISO/IEC 9646-2 (1994): "Information technology - Open Systems Interconnection - Conformance testing methodology and framework - Part 2: Abstract Test Suite specification".

[4] ISO/IEC 9646-3 (1992): "Information technology - Open Systems Interconnection - Conformance testing methodology and framework - Part 3: The Tree and Tabular Combined Notation (TTCN)" (including Amendment 1 and Amendment 2).

[5] ISO/IEC 9646-4 (1994): "Information technology - Open Systems Interconnection - Conformance testing methodology and framework - Part 4: Test realization".

[6] ISO/IEC 9646-5 (1994): "Information technology - Open Systems Interconnection - Conformance testing methodology and framework - Part 5: Requirements on test laboratories and clients for the conformance assessment process".

[7] ETS 300 836-2: "Radio Equipment and Systems (RES); HIgh PErformance Radio Local Area Network (HIPERLAN) Type 1; Conformance testing specification; Part 2: Protocol Implementation Conformance Statement (PICS) proforma specification".

[8] ETS 300 836-3: "Radio Equipment and Systems (RES); HIgh PErformance Radio Local Area Network (HIPERLAN) Type 1; Conformance testing specification; Part 3: Test Suite Structure and Test Purposes (TSS&TP) specification".

iTeh STANDARD PREVIEW
(standards.iteh.ai)
SIST ETS 300 836-4 E1:2006
https://standards.iteh.ai/catalog/standards/sist/d883bd29-8c1a-44c8-8ce7-3ede398c797d3/sist-ets-300-836-4-e1-2006

3 Definitions and abbreviations

3.1 Definitions

For the purposes of this ETS, the following definitions apply, in addition to those given in ETS 300 652 [1]:

Abstract Test Suite (ATS): See ISO/IEC 9646-1 [2].

Implementation Under Test (IUT): See ISO/IEC 9646-1 [2].

Lower Tester (LT): See ISO/IEC 9646-1 [2].

Protocol Implementation Conformance Statement (PICS) proforma: See ISO/IEC 9646-1 [2].

Protocol Implementation eXtra Information for Testing (PIXIT) proforma: See ISO/IEC 9646-1 [2].

Point of Control and Observation (PCO): See ISO/IEC 9646-1 [2].

Protocol Implementation Conformance Statement (PICS): See ISO/IEC 9646-1 [2].

Protocol Implementation Extra Information For Testing (PIXIT): See ISO/IEC 9646-1 [2].

System Under Test (SUT): See ISO/IEC 9646-1 [2].

Upper Tester (UT): See ISO/IEC 9646-1 [2].

3.2 Abbreviations

iTeh STANDARD PREVIEW
(standards.iteh.ai)

For the purposes of this ETS, the following abbreviations apply, in addition to those given in ETS 300 652 [1]:

SIST ETS 300 836-4 E1:2006
https://standards.iteh.ai/catalog/standards/sist/d883bd29-8c1a-44c8-8ce7-3ad298797d3/sist-ets-300-836-4-e1-2006

ASP	Abstract Service Primitive
ATM	Abstract Test Method
ATS	Abstract Test Suite
CAC	Channel Access Control
ExTS	Executable Test Suite
HCPDU	HIPERLAN CAC Protocol Data Unit
HEU	HIPERLAN Enhancement Unit
HIPERLAN	HIgh PErformance Radio Local Area Network
IUT	Implementation Under Test
LT	Lower Tester
MAC	Medium Access Control
MOT	Means of Testing
PCO	Point of Control and Observation
PDU	Protocol Data Unit
PICS	Protocol Implementation Conformance Statement
PIXIT	Protocol Implementation eXtra Information for Testing
SUT	System Under Test
TMP	Test Management Protocol
TMPDU	Test Management Protocol Data Unit
TP	Test Purpose
TSS&TP	Test Suite Structure and Test Purposes
TTCN	Tree and Tabular Combined Notation
UT	Upper Tester

4 Abstract Test Method (ATM)

4.1 ATM for MAC protocol

There are two different ATMs supported by the MAC ATS:

- co-ordinated test method;
- remote test method.

4.1.1 Co-ordinated test method

In this ATM there is an UT which communicates with the LT by means of a Test Management Protocol (TMP). The UT can send Protocol and Data Units (PDU) and examine the content of received PDUs. There is one Point of Control and Observation (PCO). This is in the test system at the upper boundary of the CAC (PCO-L) above which is the LT. The boundary between the IUT and the UT is not considered a PCO.

The test events at PCO-L are specified in terms of HCS-primitives, HMPDUs and Test Management PDUs (TMPDUs). The behaviour at the upper boundary of the IUT is not explicitly described in test cases; it is defined in the definition of the TMP which is implemented in the upper tester. The TMP is specified in annex A.

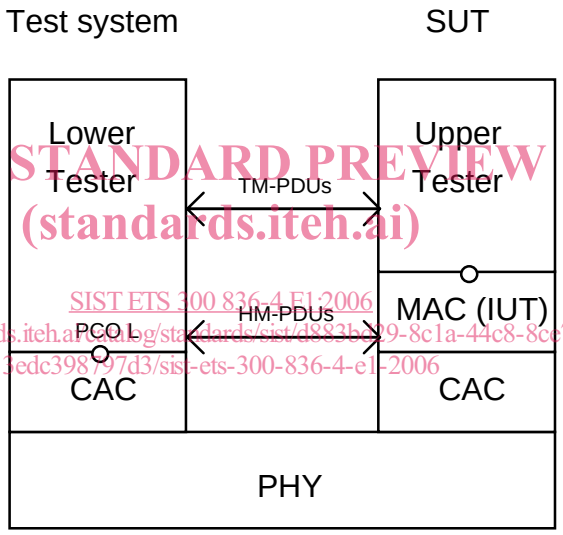

iTeh STANDARD PREVIEW
(standards.iteh.ai)
SIST ETS 300 836-4 E1:2006
https://standards.iteh.ai/catalog/standards/sist/d883bc29-8c1a-44c8-8ce7-3edc398797d3/sist-ets-300-836-4-e1-2006

Figure 1: Co-ordinated test method

4.1.2 Remote test method

In this ATM there is no special UT, the layer(s) in the SUT above the IUT may be considered as a notional upper tester. There is only one PCO. This is at the upper boundary of the CAC in the test system (PCO-L) above which is the lower tester. There is no PCO at the upper boundary of the IUT and no observation is possible at that point. It is however possible to control the IUT although this is specified by informal means (i.e. implicit sends).

The test events at PCO-L are specified in terms of HCS-primitives and HMPDUs. The behaviour at the upper boundary of the IUT is not explicitly specified. It is only possible to specify actions at the upper boundary in terms of the resulting events at PCO-L.

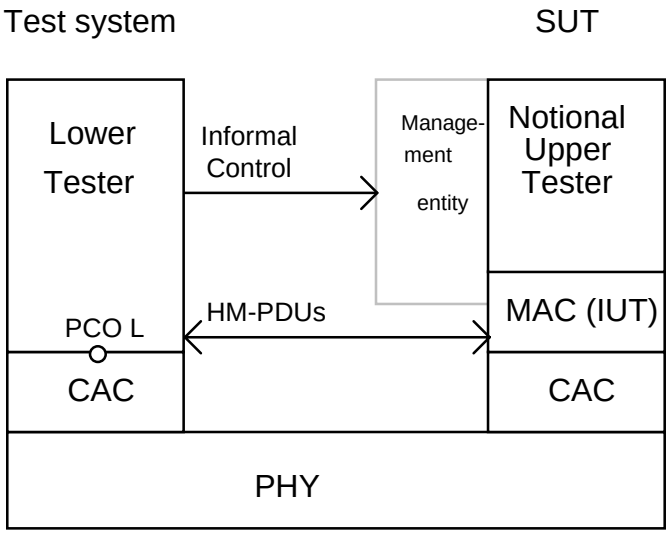

Figure 2: Remote test method

In this ATM the ATS uses implicit sends where the sending of a PDU requires an action at the upper boundary of the IUT. The use of an implicit send means "take whatever action is required to cause the IUT to send the specified PDU". Questions are included in the PIXIT regarding if, and how, such PDUs can be sent.

There are some disadvantages with this ATM:

- tests need to be deselected if the specified implicit sends are not possible according to the PIXIT;
- it is not possible to test what happens on reception of a PDU beyond detection of PDUs which are sent in response;
- it is not possible to test the correct implementation of functions such as encryption and decryption because the PDU at the upper boundary of the IUT cannot be specified or examined.

iTeh STANDARD PREVIEW
(standards.iteh.ai)
SIST ETS 300 836-4 E1:2006
https://standards.iteh.ai/catalog/standards/sist/db83bd98-fe4a-4d3f-8e37-3edc398797d3/sist-ets-300-836-4-e1-2006

The main advantage of this ATM is that it imposes no additional requirements on the IUT beyond those in the protocol specification.

4.1.3 Choice of MAC ATM

The ATM used is selected via a test suite parameter whose value is assigned in the PIXIT.

The choice of ATM will have an effect on the coverage of the ATS. See subclause 6.2 for an indication of which test cases become untestable for particular ATMs. The co-ordinated test method gives the greater coverage because many test cases can only be tested using this ATM. On the other hand, there are no test cases which can only be tested using the remote test method.

4.2 ATM for CAC protocol

There are three different ATMs supported by the CAC ATS:

- co-ordinated embedded test method - for normal HIPERLAN implementations;
- remote embedded test method - for normal HIPERLAN implementations;
- remote test method - for HIPERLAN enhancement units.

In the embedded test methods the IUT is embedded under the HIPERLAN MAC layer and in the co-ordinated embedded test method the same upper tester as for the MAC ATS is used. Where the MAC layer can act as a forwarder the upper tester is never used and there are no implicit sends, therefore there is no difference between the Co-ordinated Embedded and Remote Embedded test methods.

The test method used depends on the test suite parameters **HEU** (HIPERLAN Enhancement Unit), **U_T** (Upper Tester) and **forwarder**:

- if **HEU** is true then the remote test method is used (in this case **U_T** and **forwarder** should be false as there is no CAC interface);

- otherwise if **forwarder** is true then the remote embedded test method (identical to co-ordinated embedded) is used;

- otherwise if **U_T** is true the co-ordinated embedded test method is used;

- otherwise the remote embedded test method is used.

5 Requirements on underlying layers for testing

5.1 MAC testing

5.1.1 CAC service for MAC testing

The underlying layers used for MAC testing shall provide the HIPERLAN CAC service as defined in ETS 300 652 [1] clause 7 with the following modifications:

a) all HC-UNITDATA-request primitives issued by the IUT shall result in a HC-UNITDATA-indication primitive at the tester, except in the following situations:

   - there are simultaneous attempts to transmit by the IUT and the tester in which case the normal contention situation applies;
   - this is prevented due to errors in the physical layer.

   In particular an HC-UNITDATA-indication primitive shall be invoked at the tester side even if the tester is not identified by the destination address parameter of an HC-UNITDATA-request primitive invoked by the IUT, although this would be contrary to ETS 300 652 [1] subclause 7.7;

iTeh STANDARD PREVIEW
(standards.iteh.ai)
SIST ETS 300 836-4 E1:2006
https://standards.iteh.ai/catalog/standards/sist/d883bd29-8c1a-44c8-8ce7-3ede398797d3/sist-ets-300-836-4-e1-2006

b) all HC-UNITDATA-request primitives issued by the IUT with the destination address being an individual HCSAP address not in the range 00 00 00 00 00 00 to 00 00 00 FF FF FF shall be considered successful and result in an HC-STATUS (successful) primitive issued unless the exceptions described in (a) above apply;

c) there shall be a condition, the "busy condition", which can be controlled by the lower tester in which no HC-SYNC or HC-FREE primitives may be issued to the IUT. It shall be possible to terminate this condition with either an HC-SYNC or HC-FREE primitive being issued to the IUT (unless the CAC in the SUT does not support the synchronized channel access cycle in which case the HC-FREE is issued in both situations);

d) there shall be a facility to measure and report the channel access priority used by the IUT when transmitting a DT-HCPDU following the termination of the busy condition.

   NOTE: The busy condition is controlled by means of test suite operations.

5.1.2 CAC protocol for MAC testing

If the underlying layers in the SUT are according to ETS 300 652 [1] then the CAC protocol implemented in the tester shall conform to ETS 300 652 [1] clause 8 with the following modifications to support the modifications to the CAC service described above:

a) the procedure in ETS 300 652 [1] subclause 8.4.6 (user data delivery) is executed on receipt of all DT-HCPDUs (irrespective of destination HCSAP address);