SLOVENSKI STANDARD
SIST EN 4686:2015

01-januar-2015

Aeronavtika - Cevni priključek 8°30' iz titanove zlitine - Opremljene slepe tulke

Aerospace series - Pipe coupling 8°30' in titanium alloy - Equipped bling ferrules

Luft- und Raumfahrt - Rohrverschraubung 8°30' aus Titanlegierung - Ausgerüstete Blindstutzen

Série aérospatiale - Système de raccordement 8°30' en alliage de titane - Obturateurs équipés

Ta slovenski standard je istoveten z: EN 4686:2014

ICS:

49.025.30	Titan	Titanium
49.080	Letalski in vesoljski hidravlični sistemi in deli	Aerospace fluid systems and components

SIST EN 4686:2015 **en,fr,de**

EUROPEAN STANDARD

NORME EUROPÉENNE

EUROPÄISCHE NORM

EN 4686

October 2014

ICS 49.080

English Version

Aerospace series - Pipe coupling 8°30' in titanium alloy - Equipped blind ferrules

Série aérospatiale - Système de raccordement 8°30' en alliage de titane - Obturateurs équipés

Luft- und Raumfahrt - Rohrverschraubung 8°30' aus Titanlegierung - Ausgerüstete Blindstutzen

This European Standard was approved by CEN on 4 January 2014.

CEN members are bound to comply with the CEN/CENELEC Internal Regulations which stipulate the conditions for giving this European Standard the status of a national standard without any alteration. Up-to-date lists and bibliographical references concerning such national standards may be obtained on application to the CEN-CENELEC Management Centre or to any CEN member.

This European Standard exists in three official versions (English, French, German). A version in any other language made by translation under the responsibility of a CEN member into its own language and notified to the CEN-CENELEC Management Centre has the same status as the official versions.

CEN members are the national standards bodies of Austria, Belgium, Bulgaria, Croatia, Cyprus, Czech Republic, Denmark, Estonia, Finland, Former Yugoslav Republic of Macedonia, France, Germany, Greece, Hungary, Iceland, Ireland, Italy, Latvia, Lithuania, Luxembourg, Malta, Netherlands, Norway, Poland, Portugal, Romania, Slovakia, Slovenia, Spain, Sweden, Switzerland, Turkey and United Kingdom.

EUROPEAN COMMITTEE FOR STANDARDIZATION
COMITÉ EUROPÉEN DE NORMALISATION
EUROPÄISCHES KOMITEE FÜR NORMUNG

CEN-CENELEC Management Centre: Avenue Marnix 17, B-1000 Brussels

Ref. No. EN 4686:2014 E

Contents

Page

Foreword 3

1 Scope 4

2 Normative references 4

3 Required characteristics 4
3.1 Configuration – Dimensions – Mass 4
3.2 Surface roughness 4
3.3 Materials 4
3.4 Surface treatment 5

4 Designation 6

5 Marking 7

6 Technical specification 7

Foreword

This document (EN 4686:2014) has been prepared by the Aerospace and Defence Industries Association of Europe - Standardization (ASD-STAN).

After enquiries and votes carried out in accordance with the rules of this Association, this Standard has received the approval of the National Associations and the Official Services of the member countries of ASD, prior to its presentation to CEN.

This European Standard shall be given the status of a national standard, either by publication of an identical text or by endorsement, at the latest by April 2015, and conflicting national standards shall be withdrawn at the latest by April 2015.

Attention is drawn to the possibility that some of the elements of this document may be the subject of patent rights. CEN [and/or CENELEC] shall not be held responsible for identifying any or all such patent rights.

According to the CEN-CENELEC Internal Regulations, the national standards organizations of the following countries are bound to implement this European Standard: Austria, Belgium, Bulgaria, Croatia, Cyprus, Czech Republic, Denmark, Estonia, Finland, Former Yugoslav Republic of Macedonia, France, Germany, Greece, Hungary, Iceland, Ireland, Italy, Latvia, Lithuania, Luxembourg, Malta, Netherlands, Norway, Poland, Portugal, Romania, Slovakia, Slovenia, Spain, Sweden, Switzerland, Turkey and the United Kingdom.

1 Scope

This European Standard specifies the characteristics of equipped blind ferrules for pipe couplings 8°30', in titanium alloy, for aerospace applications.

2 Normative references

The following documents, in whole or in part, are normatively referenced in this document and are indispensable for its application. For dated references, only the edition cited applies. For undated references, the latest edition of the referenced document (including any amendments) applies.

DIN 471, *Retaining rings for shafts — Normal type and heavy type* [1)]

EN 3269, *Aerospace series — Pipe coupling 8°30' in titanium alloy — Ferrules, blind, with dynamic beam seal end*

EN 3275, *Aerospace series — Pipe coupling 8°30' up to 28 000 kPa — Dynamic beam seal — Metric series — Technical specification*

EN 3311, *Aerospace series — Titanium alloy TI-P64001 (Ti-6Al-4V) — Annealed — Bar for machining — D < 110 mm*

EN 3314, *Aerospace series — Titanium alloy TI-P64001 — Solution treated and aged — Bar for machining — D ≤ 75 mm* [2)]

EN 4031, *Aerospace series — Pipe coupling 8°30' in titanium alloy — Nuts for welded ferrule*

ISO 5855-3, *Aerospace — MJ threads — Part 3: Limit dimensions for fittings for fluid systems*

MIL-PRF-24635, *Performance specification — Coating systems, weather resistant, exterior use* [3)]

FED-STD-595, *Federal Standard: colors used in government procurement* (*Color FS 11136*) [3)]

3 Required characteristics

3.1 Configuration – Dimensions – Mass

According to Figure 1 and Table 1. Dimensions applied before lubricating.

See EN 3269 and EN 4031 for missing dimensions.

3.2 Surface roughness

According to Figure 1.

3.3 Materials

According to EN 3311 or EN 3314 for nuts and blind ferrules.

Stainless steel for external retaining rings according to DIN 471.

---

1) To be obtained from: Beuth Verlag, Burggrafenstr. 6, 10787 Berlin (www.beuth.de).

2) Published as ASD-STAN Prestandard at the date of publication of this standard (www.asd-stan.org).

3) Published by: DoD National (US) Mil. Department of Defense http://www.defenselink.mil/

3.4 Surface treatment

Lubrication: PTFE coating on the 110° Nut contact area, see EN 4031.

Optional, red coating FED-STD-595/11136 in accordance with MIL-PRF-24635 (see Figure 1 and Table 2).

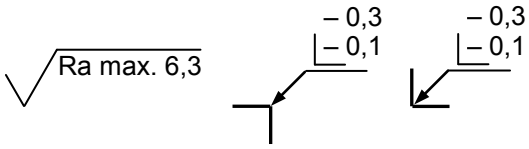

Dimensions in millimetres

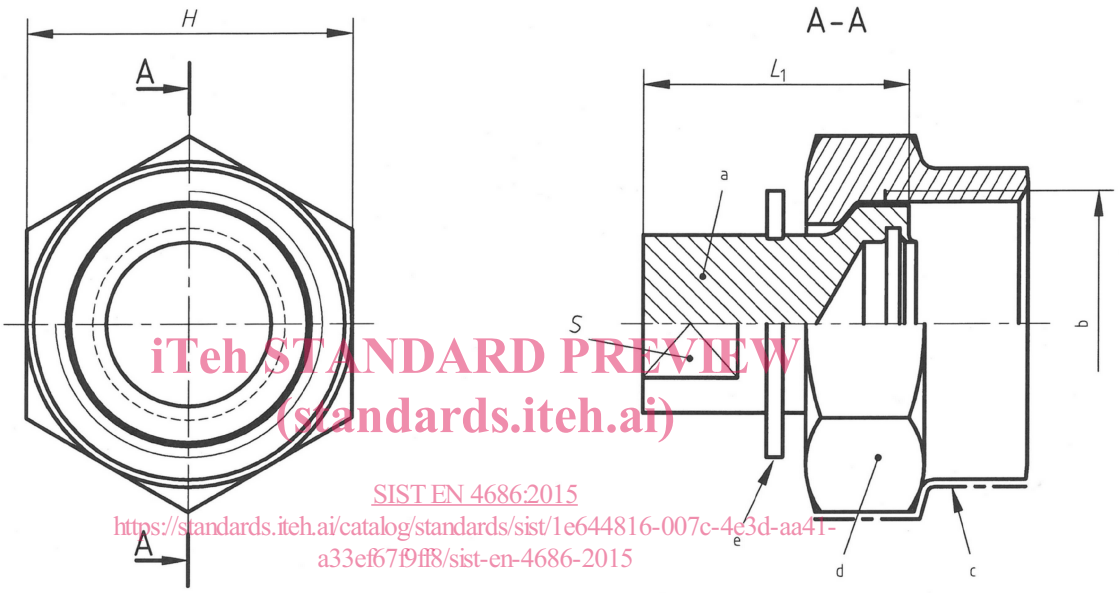

Key

a Blind ferrule according to EN 3269

b Diameter thread

c Red coating zone

d Nut coating zone

e Axial mounting external type retaining ring

Figure 1

Table 1

Code [a]	Thread [b] 4H5H	L_1 ± 0,3	S h13	H h13
05	MJ10×1	18	5	14
06	MJ12×1,25			16
08	MJ14×1,5	18,5	6	18
10	MJ16×1,5		8	21
12	MJ18×1,5		10	22
14	MJ20×1,5		12	24
16	MJ22×1,5			27
18	MJ24×1,5	20		30
20	MJ27×1,5	21		32
22	MJ30×1,5			36
25	MJ33×1,5		14	41
28	MJ36×1,5			46
32	MJ39×1,5	22,5	17	50

a Corresponds to the pipe nominal outside diameter.

b According to ISO 5855-3.

4 Designation

EXAMPLE

Description block	Identity block
EQUIPPED BLIND FERRULE	EN4686-05R

Number of this standard

Code (see Table 1)

Red coating code (see Table 2)

NOTE If necessary, the code I9005 shall be placed between the description block and the identity block.

Table 2

Option	Code
Red coating	R
No red coating	No code