SLOVENSKI STANDARD
oSIST prEN 13232-3:2014

01-julij-2014

Železniške naprave - Zgornji ustroj proge - Kretnice in križišča za Vignolove tirnice - 3. del: Zahteve za stik kolo-tirnica

Railway applications - Track - Switches and crossings for Vignole rails - Part 3: Requirements for wheel/rail interaction

Bahnanwendungen - Oberbau - Weichen und Kreizungen für Vignolschienen - Teil 3: Anforderungen an das Zusammenspiel Rad/Schiene

Applications ferroviaires - Voie - Appareils de voie - Partie 3: Exigences pour l'interaction Roue/Rail

Ta slovenski standard je istoveten z: prEN 13232-3 rev

ICS:

45.080	Tračnice in železniški deli	Rails and railway components

oSIST prEN 13232-3:2014 **en,fr,de**

EUROPEAN STANDARD

NORME EUROPÉENNE

EUROPÄISCHE NORM

DRAFT
prEN 13232-3 rev

June 2014

ICS 93.100

Will supersede EN 13232-3:2003+A1:2011

English Version

Railway applications - Track - Switches and crossings for Vignole rails - Part 3: Requirements for wheel/rail interaction

Applications ferroviaires - Voie - Appareils de voie - Partie 3: Exigences pour l'interaction Roue/Rail

Bahnanwendungen - Oberbau - Weichen und Kreizungen für Vignolschienen - Teil 3: Anforderungen an das Zusammenspiel Rad/Schiene

This draft European Standard is submitted to CEN members for enquiry. It has been drawn up by the Technical Committee CEN/TC 256.

If this draft becomes a European Standard, CEN members are bound to comply with the CEN/CENELEC Internal Regulations which stipulate the conditions for giving this European Standard the status of a national standard without any alteration.

This draft European Standard was established by CEN in three official versions (English, French, German). A version in any other language made by translation under the responsibility of a CEN member into its own language and notified to the CEN-CENELEC Management Centre has the same status as the official versions.

CEN members are the national standards bodies of Austria, Belgium, Bulgaria, Croatia, Cyprus, Czech Republic, Denmark, Estonia, Finland, Former Yugoslav Republic of Macedonia, France, Germany, Greece, Hungary, Iceland, Ireland, Italy, Latvia, Lithuania, Luxembourg, Malta, Netherlands, Norway, Poland, Portugal, Romania, Slovakia, Slovenia, Spain, Sweden, Switzerland, Turkey and United Kingdom.

Recipients of this draft are invited to submit, with their comments, notification of any relevant patent rights of which they are aware and to provide supporting documentation.

Warning : This document is not a European Standard. It is distributed for review and comments. It is subject to change without notice and shall not be referred to as a European Standard.

EUROPEAN COMMITTEE FOR STANDARDIZATION
COMITÉ EUROPÉEN DE NORMALISATION
EUROPÄISCHES KOMITEE FÜR NORMUNG

CEN-CENELEC Management Centre: Avenue Marnix 17, B-1000 Brussels

Contents

Page

Foreword

This document (prEN 13232-3:2014) has been prepared by Technical Committee CEN/TC 256 “Railway applications”, the secretariat of which is held by DIN.

This document is currently submitted to the CEN Enquiry.

This document will supersede EN 13232-3:2003+A1:2011.

This series of standards “*Railway applications – Track – Switches and crossings for Vignole rails*” covers the design and quality of switches and crossings in flat bottomed rail. The list of Parts is as follows:

— *Part 1: Definitions*

— *Part 2: Requirements for geometric design*

— *Part 3: Requirements for wheel/rail interaction*

— *Part 4: Actuation, locking and detection*

— *Part 5: Switches*

— *Part 6: Fixed common and obtuse crossings*

— *Part 7: Crossings with moveable parts*

— *Part 8: Expansion devices*

— *Part 9 : Layouts*

Part 1 contains terminology used throughout all parts of this series. Parts 2 to 4 contain basic design guides and are applicable to all switch and crossing assemblies. Parts 5 to 8 deal with particular types of equipment including their tolerances. These use Parts 1 to 4 as a basis. Part 9 defines the functional and geometric dimensions and tolerances for layout assembly.

The following terms are used within to define the parties involved in using the EN as the technical basis for a transaction:

Customer the Operator or User of the equipment, or the Purchaser of the equipment on the User's behalf.

Supplier the Body responsible for the use of the EN in response to the Customer's requirements.

1 Scope

This part of this European Standard defines the main wheel/track interaction criteria to be taken into account during the geometrical design of switches and crossings (S&C) layouts.

It specifies:

— characterisation of wheel and track dimensions;

— geometric design principles for wheel guidance;

— design principles for wheel load transfer;

— deciding whether movable crossings are needed.

These are illustrated by their application to turnout components:

— switches;

— crossings;

— check rails,

but the principles apply equally to more complex layouts. There are also simplified definitions of the safety and functional dimensions, which can be used in conjunction with the general principles as the basis for more in-depth assessment.

2 Normative references

The following documents, in whole or in part, are normatively referenced in this document and are indispensable for its application. For dated references, only the edition cited applies. For undated references, the latest edition of the referenced document (including any amendments) applies.

prEN 13232-1:2013, *Railway applications – Track – Switches and crossings for Vignole rails – Part 1: Definitions*

prEN 13232-4:2014, *Railway applications – Track – Switches and crossings for Vignole rails – Part 4: Actuation, locking and detection*

prEN 13232-5:2014, *Railway applications – Track – Switches and crossings for Vignole rails – Part 5: Switches*

EN 13803-2, *Railway applications – Track – Track alignment design parameters – Track gauges 1435 mm and wider – Part 2: Switches and crossings and comparable alignment design situations with abrupt changes of curvature*

EN 13715, *Railway applications – Wheelsets and bogies – Wheels – Tread profile*

UIC 505-1, *Railway transport stock – Rolling stock construction gauge*

UIC 505-4, *Effects of the application of the kinematic gauges defined in the 505 series of leaflets on the positioning of structures in relation to the tracks and of the tracks in relation to each other*

UIC 510-2, *Trailing stock – Conditions concerning the use of wheels of various diameters with running gear of different types*

3 Terms and definitions

3.1
guiding force *Y*
force, acting parallel to the running surface, between the wheel and the relevant track component (usually a rail)

3.2
wheel load *Q*
force, acting perpendicular to the running surface, between the wheel on one hand and the relevant track component (rail)

3.3
contact angle γ_A
angle of the contact plane, measured at the contact point A between the wheel and the track component. In the case of a two-point contact, the one nearest the wheel flange shall be considered. See Figure 1.

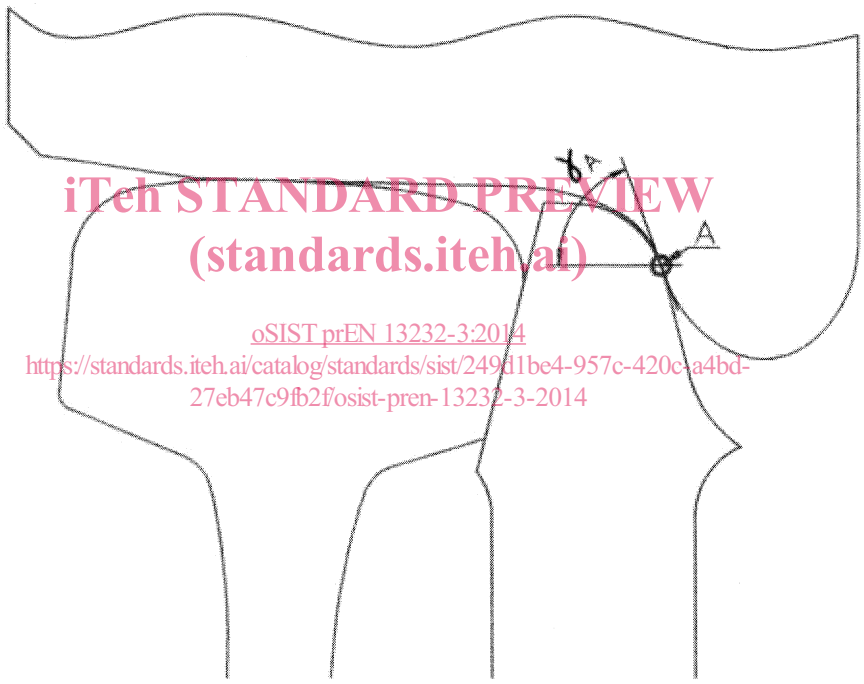

Key

γ_A contact angle
A contact point

Figure 1 — Contact angle

This contact angle determines the contact danger zone on the wheel, as defined in Figure 5.

3.4
friction coefficient μ
friction coefficient encountered at the contact point where the contact angle is determined

3.5
flange sharpness q_R
parameter which characterises the sharpness of the wheel flange. The measurement is taken in accordance with UIC 510-2 at the active side of the flange as defined in Figure 2. It is the distance, parallel to the wheel axis, between the following two points:

- reference point on the profile, at a distance from wheel axis of 10 mm more than the wheel radius;
- a reference point, located at a distance 2 mm from the flange tip towards the wheel axis.

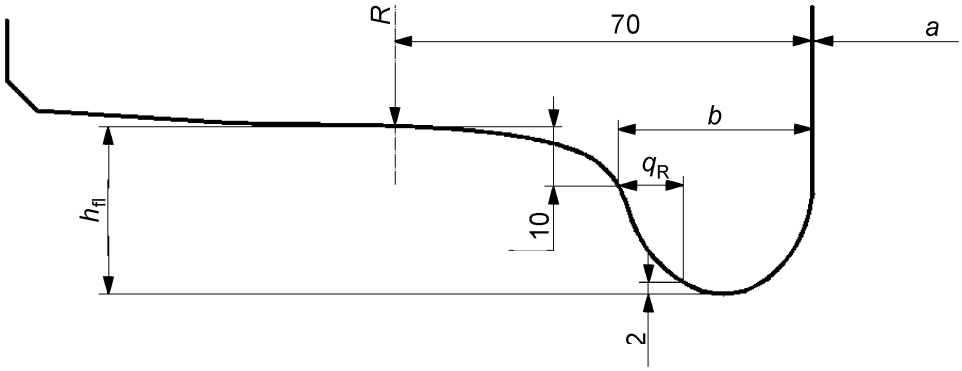

Key

a wheel back to back
b flange width
h_{fl} flange depth
q_R flange sharpness
R wheel radius

Figure 2 — Wheel parameters

3.6
flange depth h_{fl}
see Figures 2 and 5

3.7
wheel back-to-back *a*
see Figures 2, 5 and 31. The symbol "*a*" is used throughout this standard. An index max or min is given to this symbol according respectively to the maximum and minimum values that can occur during operation

3.8
flange width *b*
see Figures 2 and 5. The symbol "*b*" is used throughout this standard. An index max or min is given to this symbol according respectively to the maximum and minimum values that can occur during operation

3.9
switch point retraction *E*
distance, measured at the reference plane, between the reference line of switch and stock rail at the actual switch toe

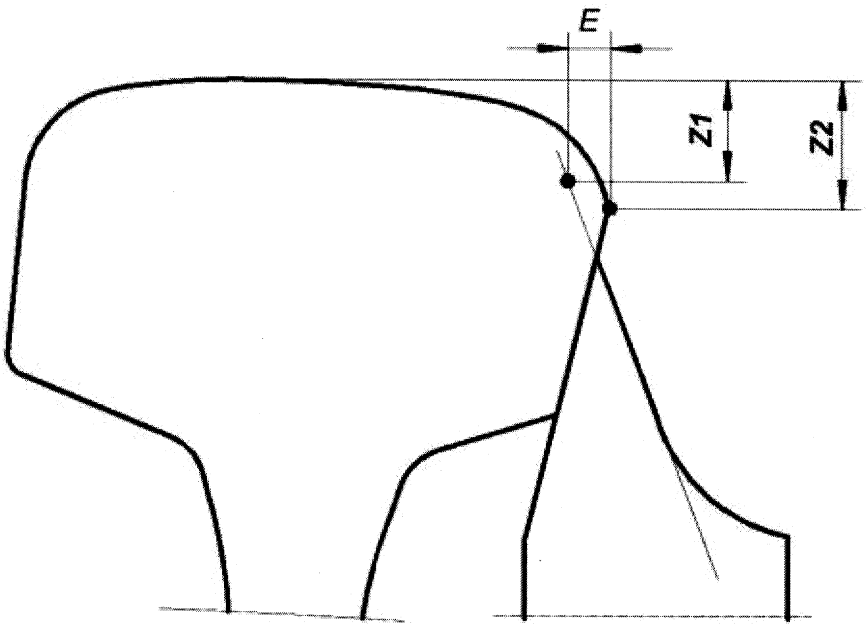

Key

E Point retraction

Z1 Switch rail machining reference plane (see prEN 13232-5:2014)

Z2 Stock rail machining reference plane (see prEN 13232-5:2014)

Figure 3 — Switch point retraction

3.10
point retraction in fixed common crossing
reference line in a fixed common crossing which can deviate from the theoretical geometry line. From a certain distance to the crossing point, the reference line of the Vee can, depending on the design, be removed from this theoretical line away from the wheel flange in order to avoid contact between both elements. This situation is described in Figure 4

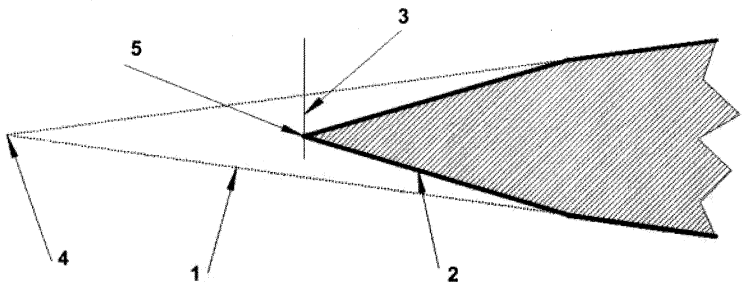

Key

1 Theoretical reference line

2 Actual reference line

3 Point retraction

4 Mathematical point (*MP*)

5 Actual point (*RP*)

Figure 4 — Point retraction in fixed common crossing

The value of the point retraction is measured at the actual point (RP).

4 Inputs

4.1 General

The motion of wheels and transfer of wheel loads is a complex subject, involving the accumulation of extensive data and an understanding of dynamic effects.

By making certain assumptions it is feasible to define rules which are simple yet rigorous enough for design of all types of switches and crossings. Some of these rules assume a 2-axle bogie or vehicle. The need for other special requirements such as those posed by 3-axle or other vehicles must be stated by the Customer.

4.2 Wheel and track parameters

This clause deals with the key parameters needed for the analysis of the interaction between wheels and the track, either for guidance calculations or load transfer calculations.

Wheel and track dimensions are defined below.

4.2.1 Wheel profiles

Sufficient dimensions of the cross-section or profile of a wheel are required for switch and crossing design. As a minimum, a dimensioned profile drawing shall be provided by the customer, with the following key dimensions as defined in Figure 5:

— flange width, height and flange angle;

— tyre width and tread angle;

— wheel diameter or radius.

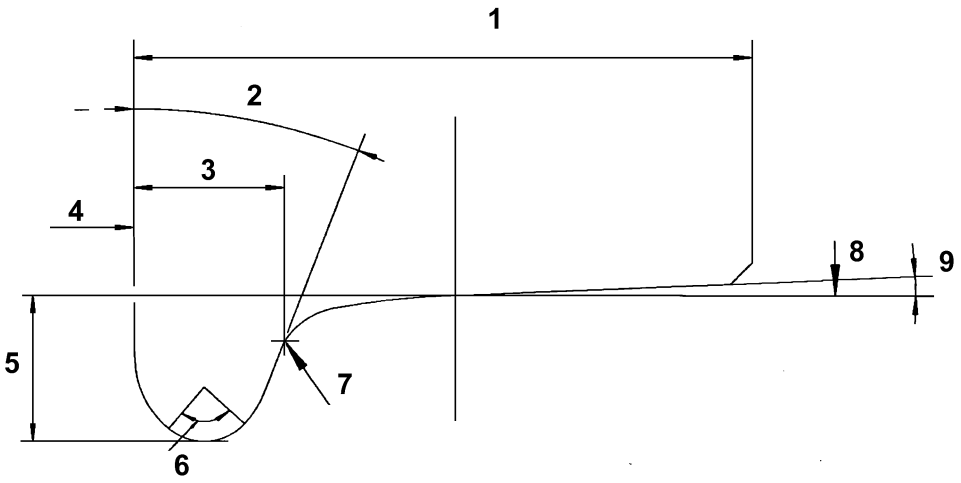

Key

1	Tyre width	6	Danger zone
2	Flange angle	7	Contact point
3	Flange width	8	Wheel diameter
4	Wheel back to back	9	Tread angle
5	Flange depth		

Figure 5 — Key wheel dimensions (in addition to profile details)

4.2.2 Wheelsets

Additional parameters related to the wheelsets are required for calculations for wheelset guidance. The Customer shall provide the following parameter values:

— wheel back-to-back (see Figure 2 or 5);

— axle spacing;

— number of axles;

— clearance of middle axles, if applicable;

— bogie spacing and minimum curve radius for vehicles.

4.2.3 Rail and track

The key parameters related to the track geometry which are used in calculations for wheelset guidance are shown in Figure 6 and listed below:

— centreline radius (*R*);

— track gauge (*G*);

— dimension for nose protection (check gauge) (*F*);

— wing flangeway (*D*).

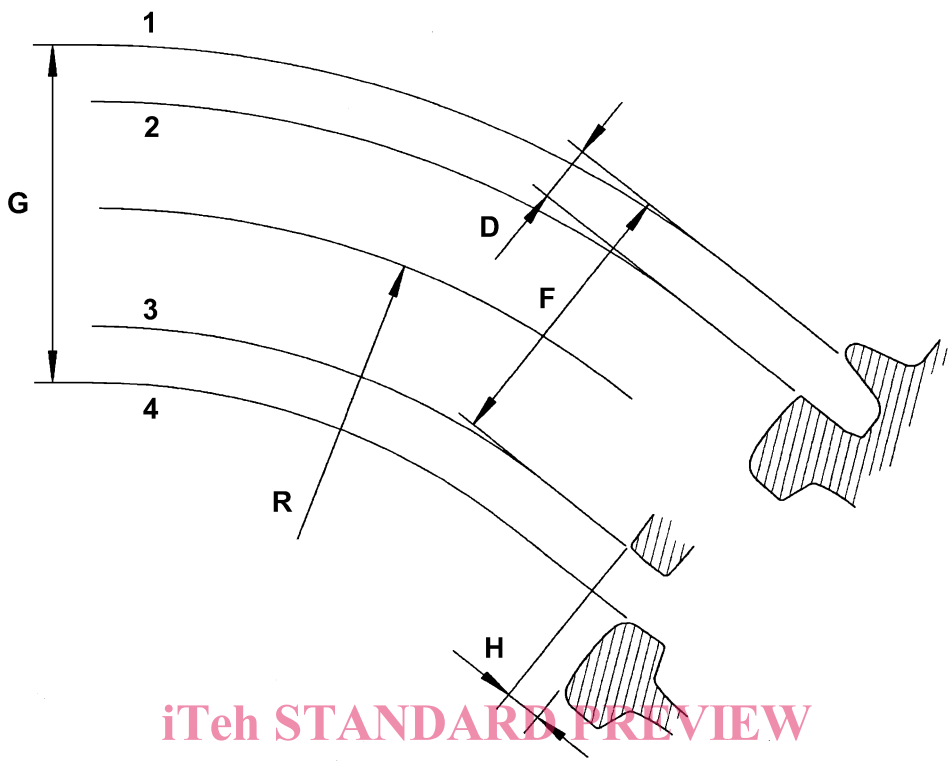

Key

1 Highside
2 Wing
3 Check
4 Lowside

Figure 6 — Key track dimensions

and the following shall be provided by the Customer:

— maximum permissible check rail height above running table (*H*).

4.2.4 Tolerances and wear

It is necessary to consider tolerances and wear in order to design correctly. These are alternatively referred to as manufacturing tolerances and service tolerances.

If the Customer provides worn wheel profiles or amounts of wear, then these should be used. Otherwise the assumptions made by the Supplier shall form the basis for design, and these shall be stated. Examples of key areas of wear are:

— back of wheel flanges;

— front of wheel flanges;

— false flanges;

— flange angle.

Locations of typical lateral wheel and track wear are shown in Figure 7. These must be taken into account when designing flangeway gaps. See clause 5.

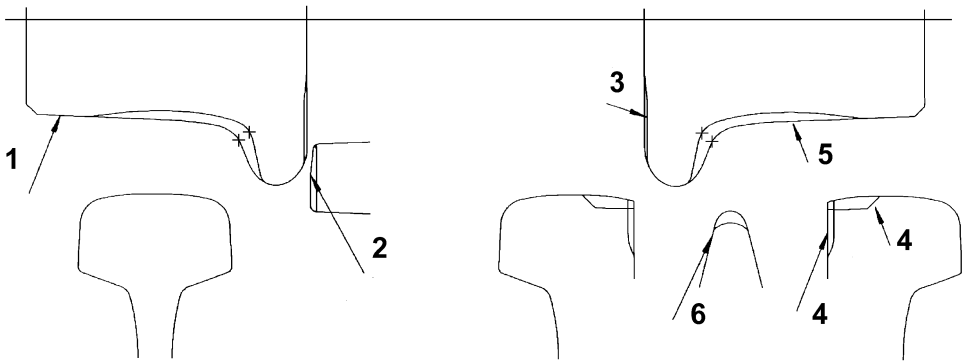

Key

1 False flange
2 Guard or check rail wear
3 Wheel wear (back)
4 Wing wear
5 Wheel wear (front)
6 Vee wear

Figure 7 — Locations of wheel and rail wear

Vertical wear, examples of which are also illustrated in Figure 7, is more relevant to wheel load transfer. See clause 6.

False flanges are to be avoided as they will increase wear as well as the rate of damage to switches and crossings.

4.3 Contact zone

For switch and crossing design, there are issues which shall be verified during design. These are as follows.

4.3.1 Contact profile

The relative radii of wheel and rail shall be taken into account.

4.3.2 Contact danger zone

The wheel profile supplied by the Customer shall indicate the danger zone for guidance contact, which is that part of the wheel flange which falls on the flange radius and which therefore exceeds the angle for safe guidance. The switch and crossing Supplier shall ensure that guidance contact does not take place within this zone for both new and worn wheels, except where it is agreed that flange-running is a normal operating regime.

The danger zone is illustrated in Figure 1 and 5.

4.3.3 Flangeway depth

The depth of the flangeway shall be sufficient to prevent flanges from running on the floor of the flangeway except if otherwise required by the Customer. This shall be verified considering the increased depth of flange of a maximum worn wheel and with the shallow flangeway of a maximum worn running surface of a rail.

4.3.4 Flangeway width

Flangeway width is governed by a number of vehicle and track parameters as described in the following sections.

5 Guidance principles

The guidance of a wheelset through switches and crossings concerns mainly the lateral or horizontal dimensions of wheel, axle, and track. Note that, in Figures 9, 10, 11 and 12, the wheels are shown in a simplified form as ellipses at the gauge reference plane.

5.1 Guard and check rails

Guard and check rails are rails which bear on the face of the wheel (usually the back face) to provide guidance without load bearing.

Figure 8a) — Check rail (normally active)

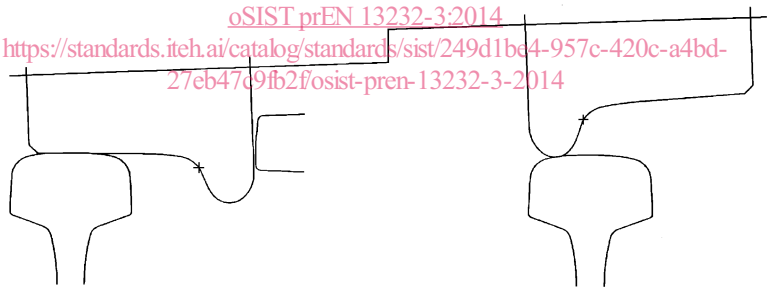

Figure 8b) — Guard rail (normally passive)

Figure 8 — Active v passive guarding

Operation of guard and check rails depends on whether they are intended to be passive or active. Passive guard rails come into operation after incipient derailment and are intended to rerail wheels once they have begun to climb the opposite running rail.

Active check rails are intended to make contact with the back of the wheel flange under normal conditions of operation in order to protect the opposite running rail. See Figure 8.

5.2 Wheelset guidance

In order to determine wheelset guidance, it is necessary to make an assumption of the way in which the wheelset is constrained to move. The assumption is shown in Figure 9. When the wheelset, bogie or vehicle is superimposed upon the track, it moves along a trajectory which is skewed relative to the track running edges.