SLOVENSKI STANDARD
SIST EN 3155-008:2019

01-november-2019

Nadomešča:

SIST EN 3155-008:2006

Aeronavtika - Električni kontakti za uporabo v veznih elementih - 008. del: Električni kontakti, moški, tip A, nagubani, razred S - Standard za proizvod

Aerospace series - Electrical contacts used in elements of connection - Part 008: Contacts, electrical, male, type A, crimp, class S - Product standard

Luft- und Raumfahrt - Elektrische Kontakte zur Verwendung in Verbindungselementen - Teil 008: Elektrische Stiftkontakte, Typ A, crimpbar, Klasse S - Produktnorm

iTeh STANDARD PREVIEW
(standards.iteh.ai)

Série aérospatiale - Contacts électriques utilisés dans les organes de connexion - Partie 008 : Contacts électriques, mâles, type A, à sertir, classe S - Norme de produit

SIST EN 3155-008:2019
https://standards.iteh.ai/catalog/standards/sist/46918763-7dd9-41a4-92d3-34c42e6e3ed7/sist-en-3155-008-2019

Ta slovenski standard je istoveten z: EN 3155-008:2019

ICS:

49.060	Letalska in vesoljska električna oprema in sistemi	Aerospace electric equipment and systems

SIST EN 3155-008:2019 **en,fr,de**

2003-01.Slovenski inštitut za standardizacijo. Razmnoževanje celote ali delov tega standarda ni dovoljeno.

SIST EN 3155-008:2019

iTeh STANDARD PREVIEW
(standards.iteh.ai)

SIST EN 3155-008:2019
https://standards.iteh.ai/catalog/standards/sist/40918763-7dd9-41a4-92d3-34c42e6e3ed7/sist-en-3155-008-2019

SIST EN 3155-008:2019

EUROPEAN STANDARD

NORME EUROPÉENNE

EUROPÄISCHE NORM

EN 3155-008

September 2019

ICS 49.060

Supersedes EN 3155-008:2005

English Version

Aerospace series - Electrical contacts used in elements of connection - Part 008: Contacts, electrical, male, type A, crimp, class S - Product standard

Série aérospatiale - Contacts électriques utilisés dans les organes de connexion - Partie 008 : Contacts électriques, mâles, type A, à sertir, classe S - Norme de produit

Luft- und Raumfahrt - Elektrische Kontakte zur Verwendung in Verbindungselementen - Teil 008: Elektrische Stiftkontakte, Typ A, crimpbar, Klasse S - Produktnorm

This European Standard was approved by CEN on 12 May 2019.

CEN members are bound to comply with the CEN/CENELEC Internal Regulations which stipulate the conditions for giving this European Standard the status of a national standard without any alteration. Up-to-date lists and bibliographical references concerning such national standards may be obtained on application to the CEN-CENELEC Management Centre or to any CEN member.

iTeh STANDARD PREVIEW
(standards.iteh.ai)

This European Standard exists in three official versions (English, French, German). A version in any other language made by translation under the responsibility of a CEN member into its own language and notified to the CEN-CENELEC Management Centre has the same status as the official versions.

SIST EN 3155-008:2019
https://standards.iteh.ai/catalog/standards/sist/10018763-7149-41e4-9945-3b13-de15-d1d1-3155-008-2019

CEN members are the national standards bodies of Austria, Belgium, Bulgaria, Croatia, Cyprus, Czech Republic, Denmark, Estonia, Finland, France, Germany, Greece, Hungary, Iceland, Ireland, Italy, Latvia, Lithuania, Luxembourg, Malta, Netherlands, Norway, Poland, Portugal, Republic of North Macedonia, Romania, Serbia, Slovakia, Slovenia, Spain, Sweden, Switzerland, Turkey and United Kingdom.

EUROPEAN COMMITTEE FOR STANDARDIZATION
COMITÉ EUROPÉEN DE NORMALISATION
EUROPÄISCHES KOMITEE FÜR NORMUNG

CEN-CENELEC Management Centre: Rue de la Science 23, B-1040 Brussels

© 2019 CEN All rights of exploitation in any form and by any means reserved worldwide for CEN national Members.

SIST EN 3155-008:2019

Contents

Page

European foreword 3
1 Scope 4
2 Normative references 4
3 Terms and definitions 5
4 Required characteristics 5
5 Designation 19
6 Marking 19
7 Technical specification 19

iTeh STANDARD PREVIEW
(standards.iteh.ai)

SIST EN 3155-008:2019
https://standards.iteh.ai/catalog/standards/sist/40918763-7dd9-41a4-92d3-34c42e6e3ed7/sist-en-3155-008-2019

SIST EN 3155-008:2019

European foreword

This document (EN 3155-008:2019) has been prepared by the Aerospace and Defence Industries Association of Europe - Standardization (ASD-STAN).

After enquiries and votes carried out in accordance with the rules of this Association, this Standard has received the approval of the National Associations and the Official Services of the member countries of ASD, prior to its presentation to CEN.

This European Standard shall be given the status of a national standard, either by publication of an identical text or by endorsement, at the latest by March 2020, and conflicting national standards shall be withdrawn at the latest by March 2020.

Attention is drawn to the possibility that some of the elements of this document may be the subject of patent rights. CEN shall not be held responsible for identifying any or all such patent rights.

This document supersedes EN 3155-008:2005.

According to the CEN-CENELEC Internal Regulations, the national standards organisations of the following countries are bound to implement this European Standard: Austria, Belgium, Bulgaria, Croatia, Cyprus, Czech Republic, Denmark, Estonia, Finland, France, Germany, Greece, Hungary, Iceland, Ireland, Italy, Latvia, Lithuania, Luxembourg, Malta, Netherlands, Norway, Poland, Portugal, Republic of North Macedonia, Romania, Serbia, Slovakia, Slovenia, Spain, Sweden, Switzerland, Turkey and the United Kingdom.

iTeh STANDARD PREVIEW
(standards.iteh.ai)
SIST EN 3155-008:2019
https://standards.iteh.ai/catalog/standards/sist/40918763-7dd9-41a4-92d3-34c42e6e3ed7/sist-en-3155-008-2019

SIST EN 3155-008:2019

1 Scope

This document specifies the required characteristics, tests and tooling applicable to male electrical contacts 008, type A, crimp, class S, used in elements of connection according to EN 3155-002.

It shall be used together with EN 3155-001.

The associated female contacts are defined in EN 3155-003 and EN 3155-009.

2 Normative references

The following documents are referred to in the text in such a way that some or all of their content constitutes requirements of this document. For dated references, only the edition cited applies. For undated references, the latest edition of the referenced document (including any amendments) applies.

EN 2083, *Aerospace series — Copper or copper alloy conductors for electrical cables — Product standard*

EN 2591 (all parts), *Aerospace series — Elements of electrical and optical connection — Test methods*

EN 3155-001, *Aerospace series — Electrical contacts used in elements of connection — Part 001: Technical specification*

EN 3155-002, *Aerospace series — Electrical contacts used in elements of connection — Part 002: List and utilization of contacts*

iTeh STANDARD PREVIEW
(standards.iteh.ai)

EN 3155-003, *Aerospace series — Electrical contacts used in elements of connection — Part 003: Contacts, electrical, female, type A, crimp, class S — Product standard*

SIST EN 3155-008:2019
https://standards.iteh.ai/catalog/standards/sist/40918763-7dd9-41a4-92d3-34c42e6e3ed7/sist-en-3155-008-2019

EN 3155-009, *Aerospace series — Electrical contacts used in elements of connection — Part 009: Contacts, electrical, female, type A, crimp, class S — Product standard*

EN 3645-001, *Aerospace series — Connectors, electrical, circular, scoop-proof, triple start threaded coupling, operating temperature 175 °C or 200 °C continuous — Part 001: Technical specification*

EN 4434, *Aerospace series — Copper or copper alloy lightweight conductors for electrical cables — Product standard (Normal and tight tolerances)*

ISO 8843, *Aircraft — Crimp-removable contacts for electrical connectors — Identification system* [1)]

SAE-AS22520, *Crimping tools, wire termination, general specification for* [2)]

SAE-AS81969, *Installing and removal tools, connector electrical contact, general specification for* [2)]

TR 4837, *Aerospace series — Applicable crimping tools for electrical contact product standards EN 3155-003, EN 3155-008 and EN 3155-009 for contact size # 10 and barrel size # 10 only* [3)]

---

1) Published by: ISO International Organization for Standardization http://www.iso.ch/

2) Published by: SAE National (US) Society of Automotive Engineers http://www.sae.org/

3) Published as ASD-STAN Technical Report at the date of publication of this standard by AeroSpace and Defence industries Association of Europe - Standardization (ASD-STAN) (www.asd-stan.org)

SIST EN 3155-008:2019

3 Terms and definitions

For the purposes of this document, the terms and definitions given in EN 3155-001 apply.

ISO and IEC maintain terminological databases for use in standardization at the following addresses:

- ISO Online browsing platform: available at http://www.iso.org/obp
- IEC Electropedia: available at http://www.electropedia.org/

4 Required characteristics

4.1 Specific characteristics

Type A contacts are for general application and class S corresponds to an operating temperature range from – 65 °C to 200 °C.

4.2 Dimensions and mass

See Figure 1 to Figure 7 and Table 1.

Dimensions and tolerances are given in millimetres and apply after surface treatment.

iTeh STANDARD PREVIEW
(standards.iteh.ai)

SIST EN 3155-008:2019
https://standards.iteh.ai/catalog/standards/sist/40918763-7dd9-41a4-92d3-34c42e6e3ed7/sist-en-3155-008-2019

SIST EN 3155-008:2019

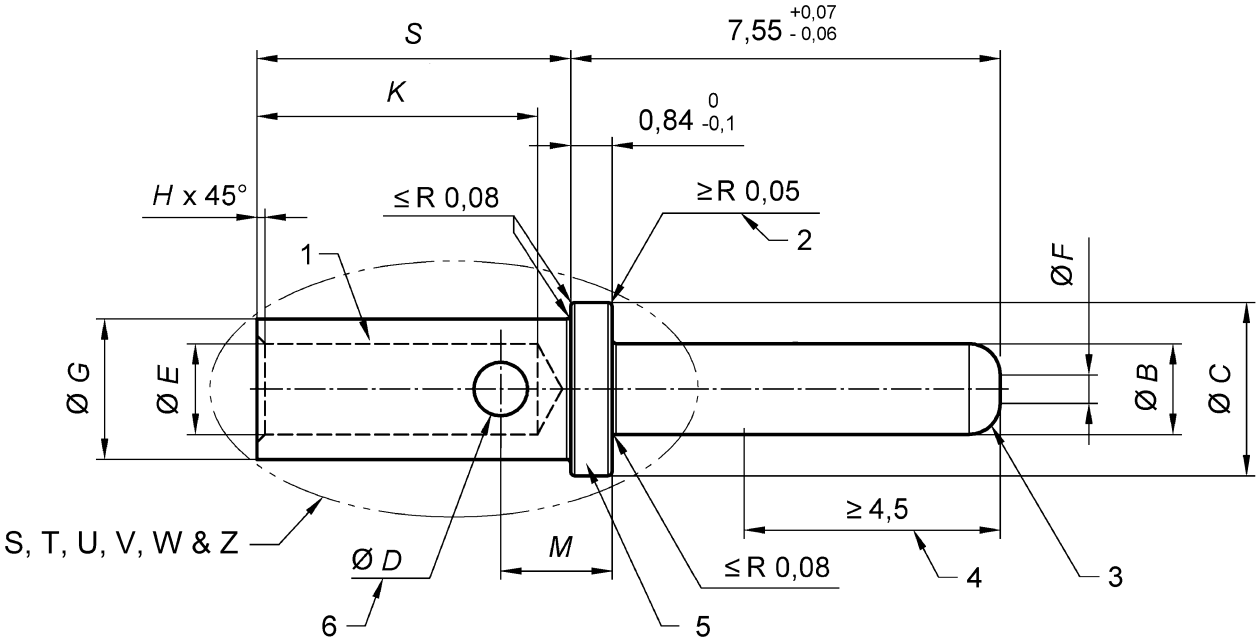

◎ Ø 0,1	Ø General concentricity	◎ Ø 0,08	Concentricity between Ø *E* and Ø *G* for size 22 contact
◎ Ø 0,025	Concentricity between Ø *E* and Ø *G* for all size contacts except size 22		

iTeh STANDARD PREVIEW
(standards.iteh.ai)
SIST EN 3155-008:2019
https://standards.iteh.ai/catalog/standards/sist/40918763-7dd9-41a4-92d3-34c42e6e3ed7/sist-en-3155-008-2019

Key

1 Colour bands, see Table 2.
2 Break or radius leading edge
3 Radius *A*
4 See EN 3155-001 for Length of Selective Protection “LSP” definition
5 Authorized area of manufacturer identification
6 One side only, see detail Z.

Figure 1 — Connector contact

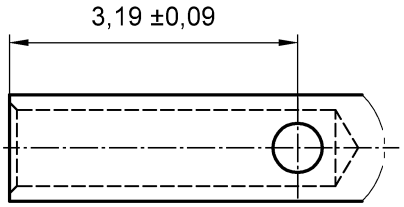

Figure 2 — Detail S – Contact size 22 barrel size 22

SIST EN 3155-008:2019

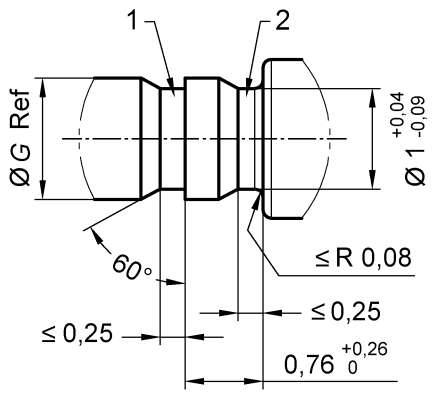

Key

1 Identification groove optional

2 Retention groove

Figure 3 — Detail T – Contact size 22 barrel size 22

iTeh STANDARD PREVIEW
(standards.iteh.ai)
SIST EN 3155-008:2019
https://standards.iteh.ai/catalog/standards/sist/4091876a-7dd9-41a4-92d3-34c42e6e3cd7/sist-en-3155-008-2019

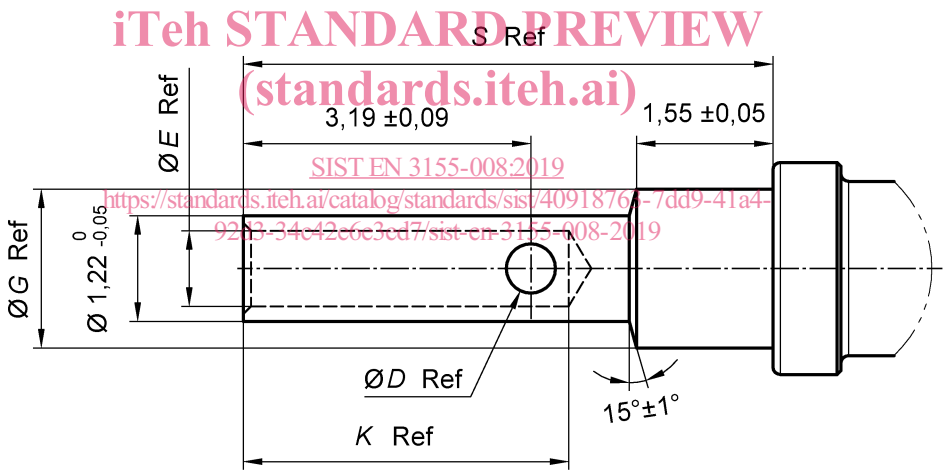

Figure 4 — Detail U – Contact size 20 barrel size 22

SIST EN 3155-008:2019

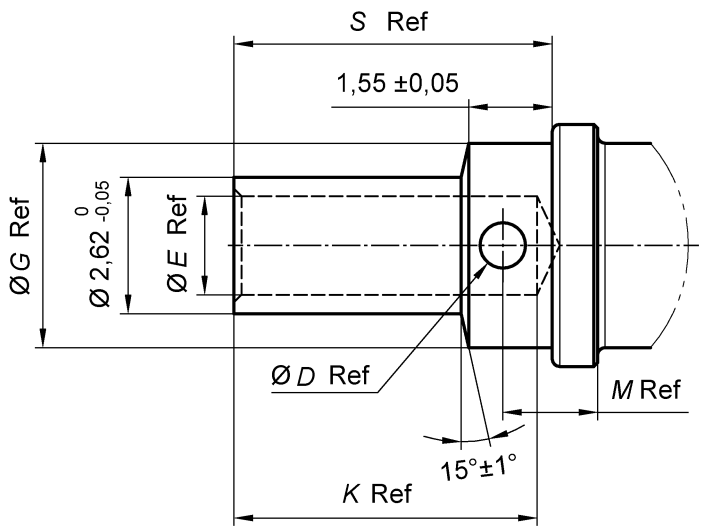

Figure 5 — Detail V – Contact size 12 barrel size 14

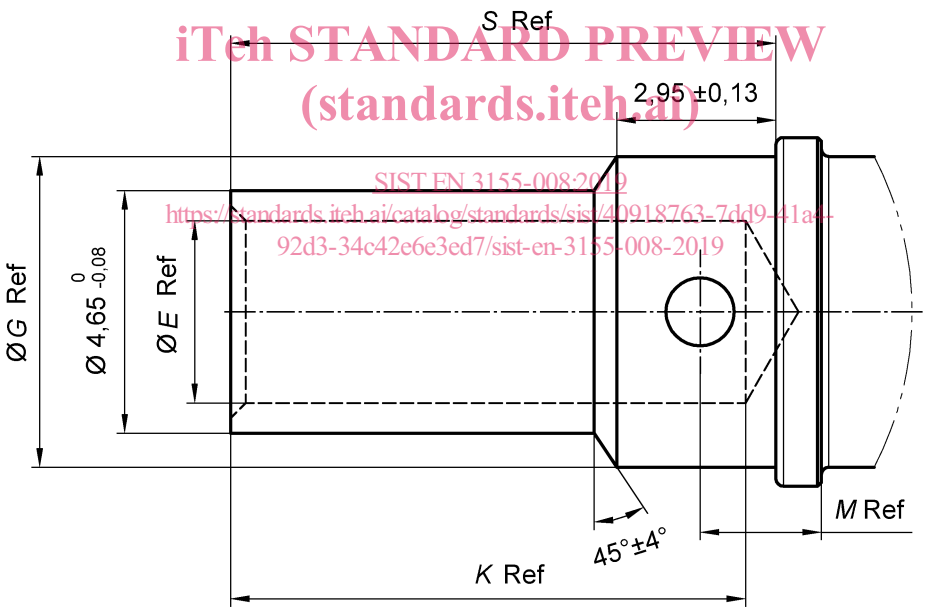

iTeh STANDARD PREVIEW
(standards.iteh.ai)
SIST EN 3155-008:2019
https://standards.iteh.ai/catalog/standards/sist/40918763-7dd9-41a4-92d3-34c42e6e3ed7/sist-en-3155-008-2019

Figure 6 — Detail W – Contact size 10

SIST EN 3155-008:2019

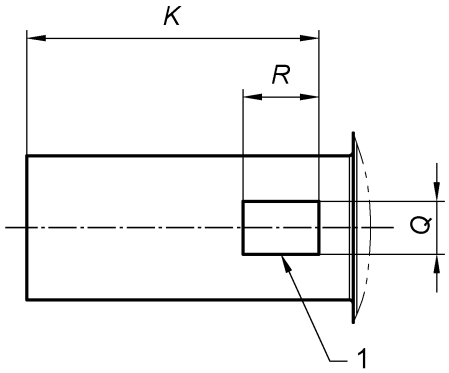

Key

1 One side only, see detail Z.

Figure 7 — Detail Z – Contact all size (optional design)

Table 1 — Connector contact

Size		*A*	*Ø B*	*Ø C*	*Ø D*	*Ø E*	*Ø F*	*Ø G*	*H*	*K*	*M*	*Q*	*R*	*S*	**Mass** g
Contact	**Barrel**	Radius													max.
22	22	0,51 0,25	0,774 0,749	1,57 1,52	0,56 0,46	0,902 0,851	0,28 max.	1,22 1,17	0,13 0,08	3,99 3,58	–	0,56 0,46	1,17 0,46	6,02 5,87	0,08
20	22	0,64 0,38	1,04 0,99	2,39 2,31	0,56 0,46	0,902 0,851	0,38 max	1,78 1,73	0,13 0,08	3,99 3,58	–	0,56 0,46	1,17 0,46	6,02 5,87	0,14
20	20	0,64 0,38	1,04 0,99	2,39 2,31	0,81 0,66	1,22 1,17	0,38 max.	1,78 1,73	0,25 0,13	5,82 5,31	1,98 1,83	0,81 0,66	1,60 0,66	6,02 5,87	0,15
20	18	0,64 0,38	1,04 0,99	2,39 2,31	0,81 0,66	1,35 1,30	0,38 max.	1,78 1,73	0,25 0,13	5,82 5,31	1,98 1,83	0,81 0,66	1,60 0,66	6,02 5,87	0,15
16	16	0,64 0,51	1,613 1,562	3,30 3,23	1,07 0,91	1,73 1,68	0,76 0,28	2,62 2,57	0,25 0,13	5,82 5,31	2,24 2,08	1,07 0,76	1,85 0,91	6,02 5,87	0,35
16	14	0,64 0,51	1,613 1,562	3,30 3,23	1,07 0,91	1,87 1,82	0,76 0,28	2,62 2,57	0,25 0,13	5,82 5,31	2,24 2,08	1,07 0,76	1,85 0,91	6,02 5,87	0,33
12	12	0,64 0,51	2,41 2,36	4,62 4,55	1,07 0,91	2,59 2,49	1,57 1,09	3,84 3,76	0,41 0,13	5,82 5,31	2,24 2,08	1,07 0,76	1,85 0,91	6,02 5,87	0,89
12	14	0,64 0,51	2,41 2,36	4,62 4,55	0,80 0,70	1,87 1,82	1,57 1,09	3,84 3,76	0,41 0,13	5,82 5,31	1,74 1,64	1,07 0,76	1,85 0,91	6,02 5,87	0,62
10	10	0,64 0,51	3,20 3,15	6,15 6,05	1,32 1,02	3,56 3,40	2,39 1,88	5,41 5,26	0,41 0,13	9,78 9,02	2,24 2,08	not appli-cable	not appli-cable	10,29 10,03	1,56

iTeh STANDARD PREVIEW
(standards.iteh.ai)
SIST EN 3155-008:2019
https://standards.iteh.ai/catalog/standards/sist/40918763-7dd9-41a4-92d3-34c42c6e3ed7/sist-en-3155-008-2019

4.3 Marking by colour code

See Table 2.