ETSI TS 103 191-3 V1.1.1 (2015-09)

Intelligent Transport Systems (ITS);
Testing;
Conformance test specifications for
Signal Phase And Timing (SPAT) and Map (MAP);
Part 3: Abstract Test Suite (ATS) and Protocol Implementation eXtra Information for Testing (PIXIT)

Reference
DTS/ITS-00136

Keywords
ATS, ITS, PIXIT, testing

ETSI

650 Route des Lucioles
F-06921 Sophia Antipolis Cedex - FRANCE

Tel.: +33 4 92 94 42 00 Fax: +33 4 93 65 47 16

Siret N° 348 623 562 00017 - NAF 742 C
Association à but non lucratif enregistrée à la
Sous-Préfecture de Grasse (06) N° 7803/88

Important notice

The present document can be downloaded from:
http://www.etsi.org/standards-search

The present document may be made available in electronic versions and/or in print. The content of any electronic and/or print versions of the present document shall not be modified without the prior written authorization of ETSI. In case of any existing or perceived difference in contents between such versions and/or in print, the only prevailing document is the print of the Portable Document Format (PDF) version kept on a specific network drive within ETSI Secretariat.

Users of the present document should be aware that the document may be subject to revision or change of status. Information on the current status of this and other ETSI documents is available at
http://portal.etsi.org/tb/status/status.asp

If you find errors in the present document, please send your comment to one of the following services:
https://portal.etsi.org/People/CommiteeSupportStaff.aspx

Copyright Notification

Contents

Intellectual Property Rights

IPRs essential or potentially essential to the present document may have been declared to ETSI. The information pertaining to these essential IPRs, if any, is publicly available for **ETSI members and non-members**, and can be found in ETSI SR 000 314: *"Intellectual Property Rights (IPRs); Essential, or potentially Essential, IPRs notified to ETSI in respect of ETSI standards"*, which is available from the ETSI Secretariat. Latest updates are available on the ETSI Web server (http://ipr.etsi.org).

Pursuant to the ETSI IPR Policy, no investigation, including IPR searches, has been carried out by ETSI. No guarantee can be given as to the existence of other IPRs not referenced in ETSI SR 000 314 (or the updates on the ETSI Web server) which are, or may be, or may become, essential to the present document.

Foreword

This Technical Specification (TS) has been produced by ETSI Technical Committee Intelligent Transport Systems (ITS).

The present document is part 3 of a multi-part deliverable covering Conformance test specification for Signal Phase And Timing (SPAT) and Map (MAP) as identified below:

Part 1: "Test requirements and Protocol Implementation Conformance Statement (PICS) pro forma";

Part 2: "Test Suite Structure and Test Purposes (TSS & TP)";

Part 3: "Abstract Test Suite (ATS) and Protocol Implementation eXtra Information for Testing (PIXIT)".

The development of ITS test specifications follows the guidance provided in the ETSI EG 202 798 [i.1]. Therefore, the ATS documentation outlined in the present document is also based on the guidance provided in ETSI EG 202 798 [i.1].

Modal verbs terminology

In the present document "**shall**", "**shall not**", "**should**", "**should not**", "**may**", "**need not**", "**will**", "**will not**", "**can**" and "**cannot**" are to be interpreted as described in clause 3.2 of the ETSI Drafting Rules (Verbal forms for the expression of provisions).

"**must**" and "**must not**" are **NOT** allowed in ETSI deliverables except when used in direct citation.

1 Scope

The present document contains the Abstract Test Suite (ATS) for MAP-SPAT Messages (MAP-SPAT) as defined in SAE J2735 [1] in compliance with the relevant requirements and in accordance with the relevant guidance given in ISO/IEC 9646-7 [5].

The objective of the present document is to provide a basis for conformance tests for MAP-SPAT Messages (MAP-SPAT) equipment giving a high probability of interoperability between different manufacturers' equipment.

The ISO standard for the methodology of conformance testing (ISO/IEC 9646-1 [2] and ISO/IEC 9646-2 [3]) as well as the ETSI rules for conformance testing (ETSI ETS 300 406 [6]) are used as a basis for the test methodology.

2 References

2.1 Normative references

References are either specific (identified by date of publication and/or edition number or version number) or non-specific. For specific references, only the cited version applies. For non-specific references, the latest version of the reference document (including any amendments) applies.

Referenced documents which are not found to be publicly available in the expected location might be found at http://docbox.etsi.org/Reference.

NOTE: While any hyperlinks included in this clause were valid at the time of publication, ETSI cannot guarantee their long term validity.

The following referenced documents are necessary for the application of the present document.

[1] SAE J2735 (2015-04-30): "Dedicated Short Range Communications (DSRC) Message Set Dictionary™".

[2] ISO/IEC 9646-1 (1994): "Information technology - Open Systems Interconnection - Conformance testing methodology and framework - Part 1: General concepts".

[3] ISO/IEC 9646-2 (1994): "Information technology -- Open Systems Interconnection -- Conformance testing methodology and framework -- Part 2: Abstract Test Suite specification".

[4] ISO/IEC 9646-6 (1994): "Information technology -- Open Systems Interconnection -- Conformance testing methodology and framework -- Part 6: Protocol profile test specification".

[5] ISO/IEC 9646-7 (1995): "Information technology -- Open Systems Interconnection -- Conformance testing methodology and framework -- Part 7: Implementation Conformance Statements".

[6] ETSI ETS 300 406 (1995): "Methods for testing and Specification (MTS); Protocol and profile conformance testing specifications; Standardization methodology".

[7] ETSI ES 201 873-1 (V4.5.1): "Methods for Testing and Specification (MTS); The Testing and Test Control Notation version 3; Part 1: TTCN-3 Core Language".

[8] ETSI ES 201 873-7 (V4.5.1): "Methods for Testing and Specification (MTS); The Testing and Test Control Notation version 3; Part 7: Using ASN.1 with TTCN-3".

[9] ETSI TS 103 191-1 (V1.1.1): "Intelligent Transport Systems (ITS); Testing; Conformance test specifications for Signal Phase And Timing (SPAT) and Map (MAP); Part 1: Test requirements and Protocol Implementation Conformance Statement (PICS) pro forma".

[10] ETSI TS 102 894-2 (V1.2.1): "Intelligent Transport Systems (ITS); Users and applications requirements; Part 2: Applications and facilities layer common data dictionary".

2.2 Informative references

References are either specific (identified by date of publication and/or edition number or version number) or non-specific. For specific references, only the cited version applies. For non-specific references, the latest version of the reference document (including any amendments) applies.

NOTE: While any hyperlinks included in this clause were valid at the time of publication, ETSI cannot guarantee their long term validity.

The following referenced documents are not necessary for the application of the present document but they assist the user with regard to a particular subject area.

[i.1] ETSI EG 202 798 (V1.1.1): "Intelligent Transport Systems (ITS); Testing; Framework for conformance and interoperability testing".

3 Definitions and abbreviations

3.1 Definitions

For the purposes of the present document, the terms and definitions given SAE J2735 [1], ISO/IEC 9646-1 [2] and in ISO/IEC 9646-7 [5] apply.

3.2 Abbreviations

For the purposes of the present document, the following abbreviations apply:

ASN	Abstract Syntax Notation
ATM	Abstract Test Method
ATS	Abstract Test Suite
BI	Invalid Syntax or Behaviour Tests
BV	Valid Behaviour Tests
ES	ETSI Standard
ISO	International Organization for Standardization
ITS	Intelligent Transport Systems
IUT	Implementation Under Test
MAP	MapData Messages
MSD	Message Dissemination
MSP	Message Processing
MTC	Main Test Component
PCTR	Protocol Conformance Test Report
PICS	Protocol Implementation Conformance Statement
PIXIT	Partial Protocol Implementation eXtra Information for Testing
PX	Pixit
SAE	Society of Automotive Engineers
SAP	Service Access Point
SCS	System Conformance Statement
SCTR	System Conformance Test Report
SPAT	Signal Phase And Timing Messages
SUT	System Under Test
TC	Test Case
TP	Test Purposes
TSS	Test Suite Structure
TTCN	Testing and Test Control Notation

4 Abstract Test Method (ATM)

4.1 Abstract protocol tester

The abstract protocol tester used by this test suite is described in figure 1. The test system simulates valid and invalid protocol behaviour, and analyses the reaction of the IUT.

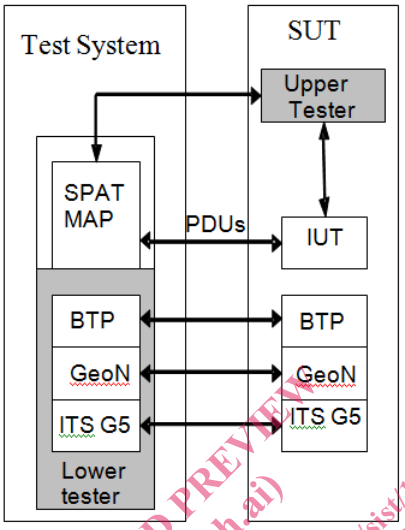

Figure 1: Abstract protocol tester – MAP SPAT

4.2 Test Configuration

This test suite uses a unique test configuration in order to cover the different test scenarios. In this configuration, the tester simulates one ITS station implementing the MAP SPAT protocol.

4.3 Test architecture

The present document implements the general TTCN-3 test architecture described in ETSI EG 202 798 [i.1], clauses 6.3.2 and 8.3.1.

Figure 2 shows the test architecture used in for the MAP SPAT ATS. The MAP SPAT test component requires using only the Main Test Component (MTC). The MTC communicates with the MAP SPAT SUT over the MapSpatPort. The MapSpatPort is used to exchange MAP SPAT protocol messages between the MAP SPAT test component and the MAP SPAT IUT.

The Upper tester entity in the SUT enables triggering MAP SPAT functionalities by simulating primitives from application. It is required to trigger the MAP SPAT layer in the SUT to send SPAT messages, which are resulting from upper layer primitives. Furthermore, receiving MAP messages may result for the MAP SPAT layer in sending primitives to the upper layer.

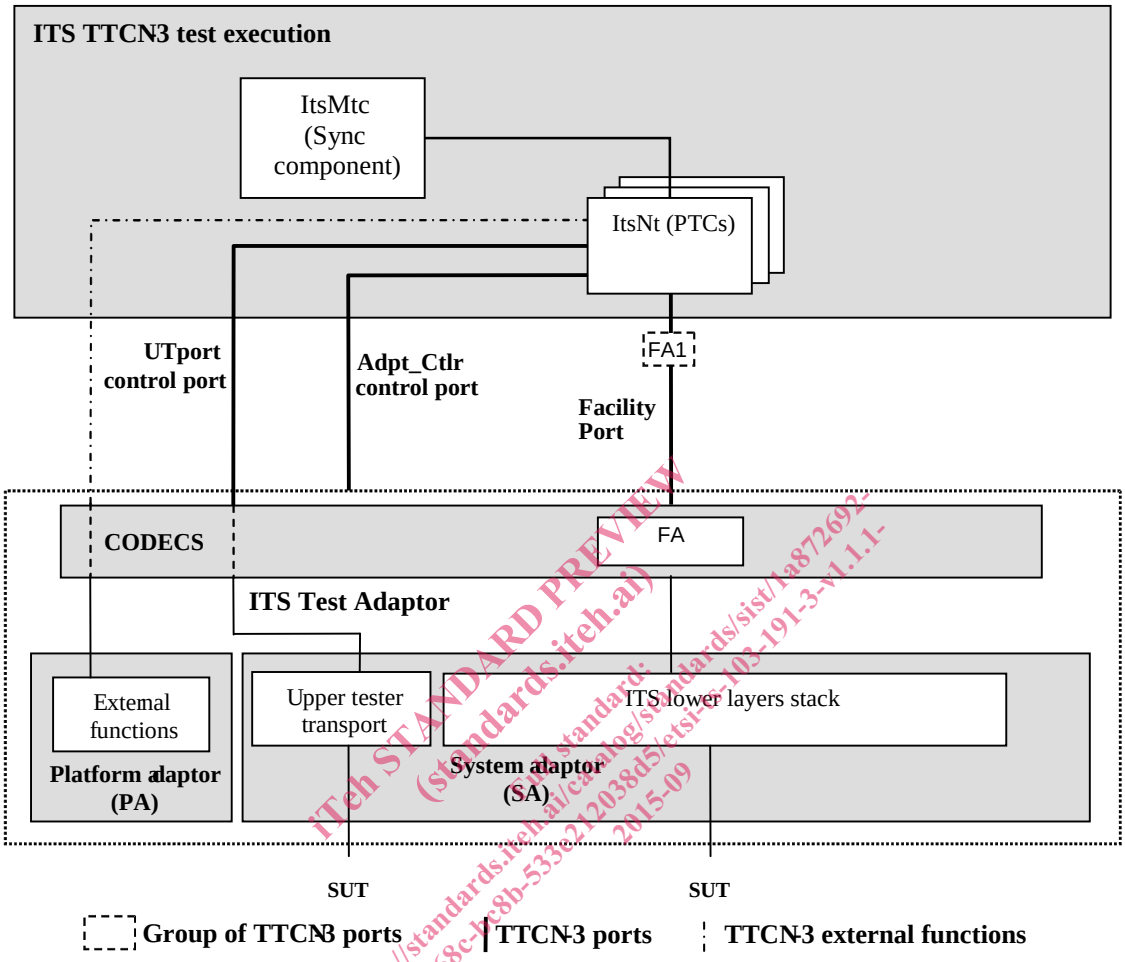

Figure 2: Test system architecture

4.4 Ports and ASPs (Abstract Services Primitives)

4.4.1 Introduction

Two ports are used by the MAP SPAT ATS:

- The mapSpatPort, of type MapSpatPort.
- The utPort, of type UpperTesterPort.

4.4.2 Primitives of the mapSpatPort

Four types of primitives are used in the mapSpatPort:

- The MapInd primitive used to receive messages of type MapMsg (MAP_PDU + RawData).
- The SpatInd primitive used to receive messages of type SpatMsg (SPAT_PDU + RawData).
- The MapReq primitive used to send messages of type MAP_PDU.
- The SpatReq primitive used to send messages of type SPAT_PDU.

These four primitives use the MAP_PDU type and the SPAT_PDU type, which is declared in the MAP_SPAT_ETSI.asn ASN.1 module, following the ASN.1 definition from SAE J2735 [1].

```
MAP-PDU ::= SEQUENCE
{
    header ItsPduHeader,
    mapData   MapData
}

SPAT-PDU ::= SEQUENCE
{
    header ItsPduHeader,
    spatData SPAT
}
```

4.4.3 Primitives of the utPort

This port uses six types of primitives:

- The UtInitialize primitive used to initialize IUT.
- The UtMapSpatTrigger primitive used to trigger upper layer events in IUT.
- The UtInitializeResult primitive used to receive upper layer result of initialization in IUT.
- The UtMapSpatTriggerResult primitive used to receive upper layer result of triggering MAP-SPAT in IUT.
- The UtMapEventInd primitive used to receive upper layer event of MAP_PDU in IUT.
- The UtMapEventInd primitive used to receive upper layer event of SPAT_PDU in IUT.

5 Untestable Test Purposes

Table 1 gives a list of TPs, which are not implemented in the ATS due to the chosen ATM or other restrictions.

Table 1: Untestable TPs

Test purpose	Reason
None	

6 ATS conventions

6.1 Introduction

The ATS conventions are intended to give a better understanding of the ATS but they also describe the conventions made for the development of the ATS. These conventions shall be considered during any later maintenance or further development of the ATS.

The ATS conventions contain two clauses, the testing conventions and the naming conventions. The testing conventions describe the functional structure of the ATS. The naming conventions describe the structure of the naming of all ATS elements.

To define the ATS, the guidelines of the document ETSI ETS 300 406 [6] was considered.