ETSI TS 102 869-3 V1.3.1 (2014-05)

Intelligent Transport Systems (ITS);
Testing;
Conformance test specifications for
Decentralized Environmental Notification Messages (DENM);
Part 3: Abstract Test Suite (ATS) and
Protocol Implementation eXtra Information for Testing (PIXIT)

Reference
RTS/ITS-00151

Keywords
ATS, ITS, PIXIT, testing

ETSI

650 Route des Lucioles
F-06921 Sophia Antipolis Cedex - FRANCE

Tel.: +33 4 92 94 42 00 Fax: +33 4 93 65 47 16

Siret N° 348 623 562 00017 - NAF 742 C
Association à but non lucratif enregistrée à la
Sous-Préfecture de Grasse (06) N° 7803/88

Important notice

The present document can be downloaded from:
http://www.etsi.org

The present document may be made available in electronic versions and/or in print. The content of any electronic and/or print versions of the present document shall not be modified without the prior written authorization of ETSI. In case of any existing or perceived difference in contents between such versions and/or in print, the only prevailing document is the print of the Portable Document Format (PDF) version kept on a specific network drive within ETSI Secretariat.

Users of the present document should be aware that the document may be subject to revision or change of status. Information on the current status of this and other ETSI documents is available at
http://portal.etsi.org/tb/status/status.asp

If you find errors in the present document, please send your comment to one of the following services:
http://portal.etsi.org/chaircor/ETSI_support.asp

Copyright Notification

Contents

Intellectual Property Rights

IPRs essential or potentially essential to the present document may have been declared to ETSI. The information pertaining to these essential IPRs, if any, is publicly available for **ETSI members and non-members**, and can be found in ETSI SR 000 314: *"Intellectual Property Rights (IPRs); Essential, or potentially Essential, IPRs notified to ETSI in respect of ETSI standards"*, which is available from the ETSI Secretariat. Latest updates are available on the ETSI Web server (http://ipr.etsi.org).

Pursuant to the ETSI IPR Policy, no investigation, including IPR searches, has been carried out by ETSI. No guarantee can be given as to the existence of other IPRs not referenced in ETSI SR 000 314 (or the updates on the ETSI Web server) which are, or may be, or may become, essential to the present document.

Foreword

This Technical Specification (TS) has been produced by ETSI Technical Committee Intelligent Transport Systems (ITS).

The present document is part 3 of a multi-part deliverable covering Conformance test specification for Decentralized Environmental Notification Messages (DENM) as identified below:

Part 1: "Test requirements and Protocol Implementation Conformance Statement (PICS) proforma";

Part 2: "Test Suite Structure and Test Purposes (TSS & TP)";

Part 3: "Abstract Test Suite (ATS) and Protocol Implementation eXtra Information for Testing (PIXIT)".

The development of ITS test specifications follows the guidance provided in the EG 202 798 [i.1]. Therefore this ATS documentation is also based on the guidance provided in EG 202 798 [i.1].

1 Scope

The present document contains the Abstract Test Suite (ATS) for Decentralized Environmental Notification Basic Service (DENM) as defined in EN 302 637-3 [1] in compliance with the relevant requirements and in accordance with the relevant guidance given in ISO/IEC 9646-7 [5].

The objective of the present document is to provide a basis for conformance tests for Decentralized Environmental Notification Basic Service (DENM) equipment giving a high probability of interoperability between different manufacturers' equipment.

The ISO standard for the methodology of conformance testing (ISO/IEC 9646-1 [2] and ISO/IEC 9646-2 [3]) as well as the ETSI rules for conformance testing (ETS 300 406 [6]) are used as a basis for the test methodology.

2 References

References are either specific (identified by date of publication and/or edition number or version number) or non-specific. For specific references, only the cited version applies. For non-specific references, the latest version of the reference document (including any amendments) applies.

Referenced documents which are not found to be publicly available in the expected location might be found at http://docbox.etsi.org/Reference.

NOTE: While any hyperlinks included in this clause were valid at the time of publication ETSI cannot guarantee their long term validity.

2.1 Normative references

The following referenced documents are necessary for the application of the present document.

[1] ETSI EN 302 637-3 (V1.2.0): "Intelligent Transport Systems (ITS); Vehicular Communications; Basic Set of Applications; Part 3: Specifications of Decentralized Environmental Notification Basic Service".

[2] ISO/IEC 9646-1 (1994): "Information technology -- Open Systems Interconnection -- Conformance testing methodology and framework -- Part 1: General concepts".

[3] ISO/IEC 9646-2 (1994): "Information technology -- Open Systems Interconnection -- Conformance testing methodology and framework -- Part 2: Abstract Test Suite specification".

[4] ISO/IEC 9646-6 (1994): "Information technology -- Open Systems Interconnection -- Conformance testing methodology and framework -- Part 6: Protocol profile test specification".

[5] ISO/IEC 9646-7 (1995): "Information technology -- Open Systems Interconnection -- Conformance testing methodology and framework -- Part 7: Implementation Conformance Statements".

[6] ETSI ETS 300 406 (1995): "Methods for testing and Specification (MTS); Protocol and profile conformance testing specifications; Standardization methodology".

[7] ETSI ES 201 873-1 (V4.5.1): "Methods for Testing and Specification (MTS); The Testing and Test Control Notation version 3; Part 1: TTCN-3 Core Language".

[8] ETSI ES 201 873-7 (V4.5.1): "Methods for Testing and Specification (MTS); The Testing and Test Control Notation version 3; Part 7: Using ASN.1 with TTCN-3".

[9] ETSI TS 102 869-1 (1.3.1): "Intelligent Transport Systems (ITS); Testing; Conformance test specifications for Decentralized Environmental Notification Messages (DENM); Part 1: Test requirements and Protocol Implementation Conformance Statement (PICS) proforma".

[10] ETSI TS 102 894-2 (V1.1.1): "Intelligent Transport Systems (ITS); Users and applications requirements; Part 2: Applications and facilities layer common data dictionary".

2.2 Informative references

The following referenced documents are not necessary for the application of the present document but they assist the user with regard to a particular subject area.

[i.1] ETSI EG 202 798 (V1.1.1): "Intelligent Transport Systems (ITS); Testing; Framework for conformance and interoperability testing".

3 Definitions and abbreviations

3.1 Definitions

For the purposes of the present document, the terms and definitions given in EN 302 637-3 [1], ISO/IEC 9646-1 [2] and ISO/IEC 9646-7 [5] apply.

3.2 Abbreviations

For the purposes of the present document, the following abbreviations apply:

ATM	Abstract Test Method
ATS	Abstract Test Suite
CAN	Controller Area Network
DENM	Decentralized Environmental Notification Message
FA	name of interface between facilities layer and ITS-S applications
ITS	Intelligent Transportation Systems
IUT	Implementation Under Test
LDM	Local Dynamic Map
MTC	Main Test Component
PIXIT	Partial Protocol Implementation Extra Information for Testing
SA	System Adaptor
SCS	System Conformance Statement
SUT	System Under Test
TC	Test Case
TP	Test Purposes
TTCN	Tree and Tabular Combined Notation

4 Abstract Test Method (ATM)

4.1 Abstract protocol tester

The abstract protocol tester used by this test suite is described in figure 1. The test system will simulate valid and invalid protocol behaviour, and will analyse the reaction of the IUT.

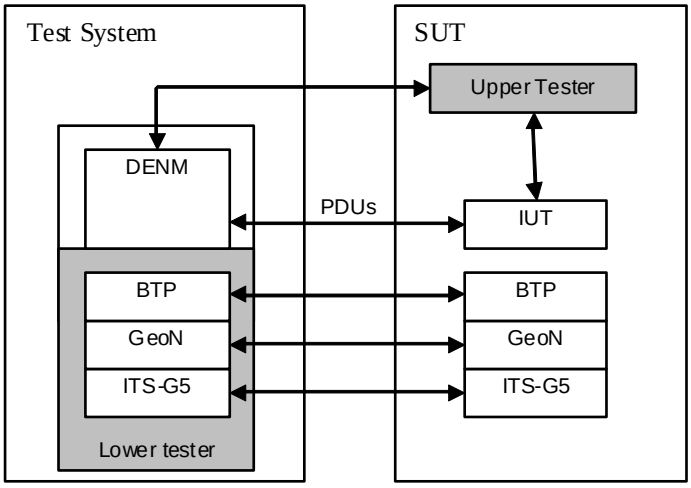

Figure 1: Abstract protocol tester - DENM

4.2 Test Configuration

This test suite uses a unique test configuration in order to cover the different test scenarios. In this configuration, the tester simulates one ITS station implementing the DENM protocol.

4.3 Test architecture

The present document implements the general TTCN-3 test architecture described in EG 202 798 [i.1], clauses 6.3.2 and 8.3.1.

Figure 2 shows the test architecture used in for the DENM ATS. The DENM test component requires using only the Main Test Component (MTC). The MTC communicates with the DENM SUT over the denmPort. The denmPort port is used to exchange DENM protocol messages between the DENM test component and the DENM IUT.

The Upper tester entity in the SUT enables triggering DENM functionalities by simulating primitives from application or LDM entities. It is required to trigger the DENM layer in the SUT to send DENM messages, which are resulting from upper layer primitives. Furthermore, receiving DENM messages may result for the DENM layer in sending primitives to the upper layer (sending Data to LDM, for instance).

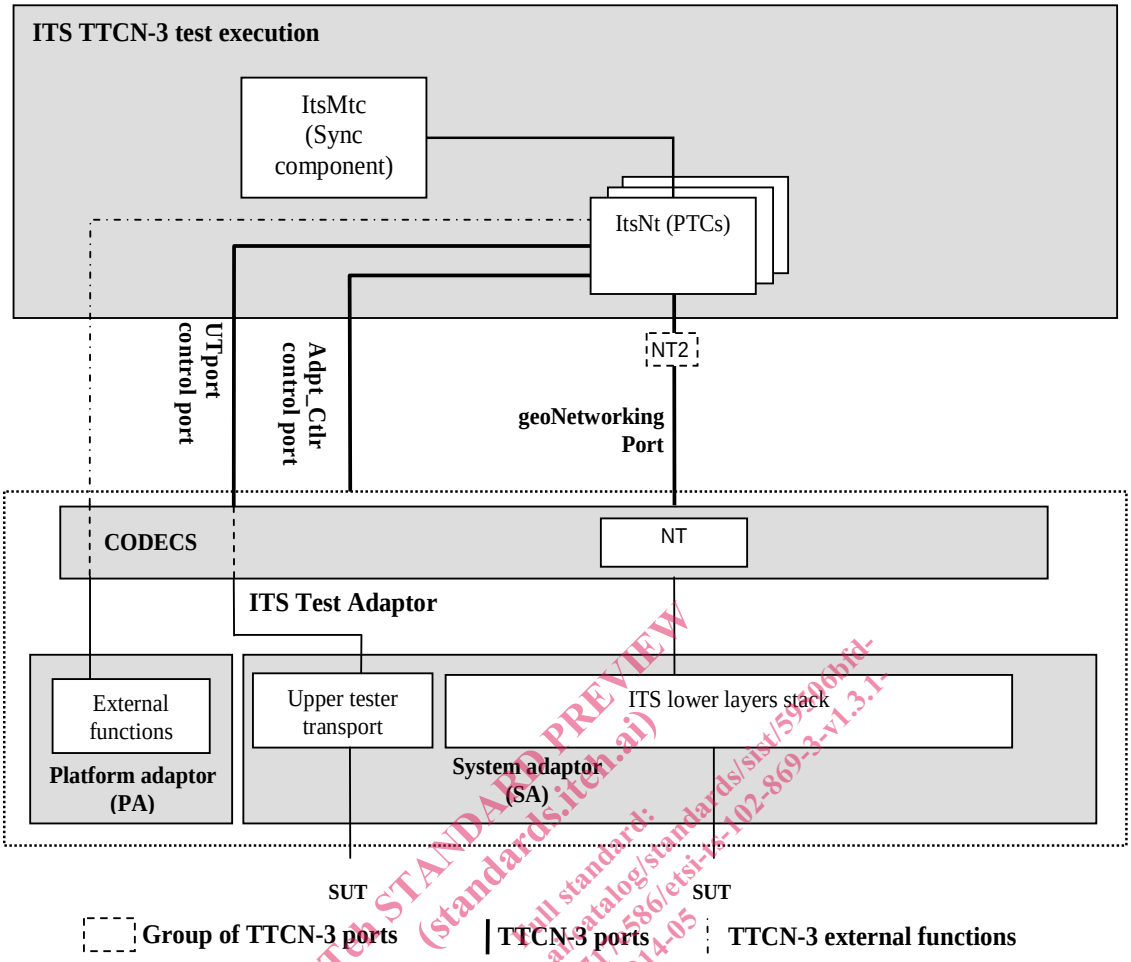

Figure 2: Test system architecture

4.4 Ports and ASPs (Abstract Services Primitives)

Two ports are used by the DENM ATS:

- The denmPort, of type DenmPort.
- The utPort of type UpperTesterPort.

4.4.1 Primitives of the denmPort

Two types of primitives are used in the denmPort:

- The DenmInd primitive, containing the received messages of type DenmPdu, and a timestamp corresponding to the receipt time.
- The DenmReq primitive containing the sent messages of type DenmPdu.

The DenmPdu type is declared in the DENM.asn ASN.1 module, following the ASN.1 definition from EN 302 637-3 [1].

```
DenmPdu ::= SEQUENCE {
    header  ItsPduHeader,
    denm    DecentralizedEnvironmentalNotificationMessage
}
```

4.4.2 Primitives of the utPort

This port uses two types of primitives:

- The UtInitialize primitive used to initialize IUT.
- The UtTrigger primitive used trigger upper layer events in IUT.

5 Untestable Test Purposes

Table 1 gives a list of TPs, which are not implemented in the ATS due to the chosen ATM or other restrictions.

Table 1: Untestable TP

Test purpose	Reason
None	

6 ATS conventions

The ATS conventions are intended to give a better understanding of the ATS but they also describe the conventions made for the development of the ATS. These conventions shall be considered during any later maintenance or further development of the ATS.

The ATS conventions contain two clauses, the testing conventions and the naming conventions. The testing conventions describe the functional structure of the ATS. The naming conventions describe the structure of the naming of all ATS elements.

To define the ATS, the guidelines of the document ETS 300 406 [6] were considered.

6.1 Testing conventions

6.1.1 Testing states

6.1.1.1 Initial state

All test cases start with the function f_prInitialState. This function brings the IUT in an "initialized" state by invoking the upper tester primitive UtInitialize.

6.1.1.2 Final state

All test cases end with the function f_poDefault. This function brings the IUT back in an "idle" state. As no specific actions are required for the idle state in EN 302 637-3 [1], the function f_ poDefault does not invoke any action.

As necessary, further actions may be included in the f_poDefault function.

6.1.2 Message types - ASN.1 definitions

ASN.1 definitions from EN 302 637-3 [1] are directly imported in TTCN-3 using the ASN.1 import method specified in ES 201 873-7 [8].