ETSI TS 102 868-3 V1.3.1 (2015-07)

Intelligent Transport Systems (ITS); Testing; Conformance test specifications for Cooperative Awareness Basic Service (CA); Part 3: Abstract Test Suite (ATS) and Protocol Implementation eXtra Information for Testing (PIXIT)

Reference
RTS/ITS-00154

Keywords
ATS, ITS, PIXIT, testing

ETSI

650 Route des Lucioles
F-06921 Sophia Antipolis Cedex - FRANCE

Tel.: +33 4 92 94 42 00 Fax: +33 4 93 65 47 16

Siret N° 348 623 562 00017 - NAF 742 C
Association à but non lucratif enregistrée à la
Sous-Préfecture de Grasse (06) N° 7803/88

Important notice

The present document can be downloaded from:
http://www.etsi.org/standards-search

The present document may be made available in electronic versions and/or in print. The content of any electronic and/or print versions of the present document shall not be modified without the prior written authorization of ETSI. In case of any existing or perceived difference in contents between such versions and/or in print, the only prevailing document is the print of the Portable Document Format (PDF) version kept on a specific network drive within ETSI Secretariat.

Users of the present document should be aware that the document may be subject to revision or change of status. Information on the current status of this and other ETSI documents is available at
http://portal.etsi.org/tb/status/status.asp

If you find errors in the present document, please send your comment to one of the following services:
https://portal.etsi.org/People/CommiteeSupportStaff.aspx

Copyright Notification

Contents

Intellectual Property Rights

IPRs essential or potentially essential to the present document may have been declared to ETSI. The information pertaining to these essential IPRs, if any, is publicly available for **ETSI members and non-members**, and can be found in ETSI SR 000 314: *"Intellectual Property Rights (IPRs); Essential, or potentially Essential, IPRs notified to ETSI in respect of ETSI standards"*, which is available from the ETSI Secretariat. Latest updates are available on the ETSI Web server (http://ipr.etsi.org).

Pursuant to the ETSI IPR Policy, no investigation, including IPR searches, has been carried out by ETSI. No guarantee can be given as to the existence of other IPRs not referenced in ETSI SR 000 314 (or the updates on the ETSI Web server) which are, or may be, or may become, essential to the present document.

Foreword

This Technical Specification (TS) has been produced by ETSI Technical Committee Intelligent Transport Systems (ITS).

The present document is part 3 of a multi-part deliverable covering Conformance test specification for Co-operative Awareness Basic Service (CA) as identified below:

Part 1: "Test requirements and Protocol Implementation Conformance Statement (PICS) pro forma";

Part 2: "Test Suite Structure and Test Purposes (TSS & TP)";

Part 3: "Abstract Test Suite (ATS) and Protocol Implementation eXtra Information for Testing (PIXIT)".

The development of ITS test specifications follows the guidance provided in the ETSI EG 202 798 [i.1]. Therefore this ATS documentation is also based on the guidance provided in ETSI EG 202 798 [i.1].

Modal verbs terminology

In the present document "**shall**", "**shall not**", "**should**", "**should not**", "**may**", "**need not**", "**will**", "**will not**", "**can**" and "**cannot**" are to be interpreted as described in clause 3.2 of the ETSI Drafting Rules (Verbal forms for the expression of provisions).

"**must**" and "**must not**" are **NOT** allowed in ETSI deliverables except when used in direct citation.

1 Scope

The present document contains the Abstract Test Suite (ATS) for Co-operative Awareness Basic Service (CA) as defined in ETSI EN 302 637-2 [1] in compliance with the relevant requirements and in accordance with the relevant guidance given in ISO/IEC 9646-7 [5].

The objective of the present document is to provide a basis for conformance tests for Co-operative Awareness Basic Service (CA) equipment giving a high probability of interoperability between different manufacturers' equipment.

The ISO standard for the methodology of conformance testing (ISO/IEC 9646-1 [2] and ISO/IEC 9646-2 [3]) as well as the ETSI rules for conformance testing (ETSI ETS 300 406 [6]) are used as a basis for the test methodology.

2 References

2.1 Normative references

References are either specific (identified by date of publication and/or edition number or version number) or non-specific. For specific references, only the cited version applies. For non-specific references, the latest version of the reference document (including any amendments) applies.

Referenced documents which are not found to be publicly available in the expected location might be found at http://docbox.etsi.org/Reference.

NOTE: While any hyperlinks included in this clause were valid at the time of publication, ETSI cannot guarantee their long term validity.

The following referenced documents are necessary for the application of the present document.

[1] ETSI EN 302 637-2 (V1.3.2): "Intelligent Transport Systems (ITS); Vehicular Communications; Basic Set of Applications; Part 2: Specification of Cooperative Awareness Basic Service".

[2] ISO/IEC 9646-1 (1994): "Information technology - Open Systems Interconnection - Conformance testing methodology and framework - Part 1: General concepts".

[3] ISO/IEC 9646-2 (1994): "Information technology -- Open Systems Interconnection -- Conformance testing methodology and framework -- Part 2: Abstract Test Suite specification".

[4] ISO/IEC 9646-6 (1994): "Information technology -- Open Systems Interconnection -- Conformance testing methodology and framework -- Part 6: Protocol profile test specification".

[5] ISO/IEC 9646-7 (1995): "Information technology -- Open Systems Interconnection -- Conformance testing methodology and framework -- Part 7: Implementation Conformance Statements".

[6] ETSI ETS 300 406 (1995): "Methods for testing and Specification (MTS); Protocol and profile conformance testing specifications; Standardization methodology".

[7] ETSI ES 201 873-1 (V4.5.1): "Methods for Testing and Specification (MTS); The Testing and Test Control Notation version 3; Part 1: TTCN-3 Core Language".

[8] ETSI ES 201 873-7 (V4.5.1): "Methods for Testing and Specification (MTS); The Testing and Test Control Notation version 3; Part 7: Using ASN.1 with TTCN-3".

[9] ETSI TS 102 868-1 (V1.3.1): "Intelligent Transport Systems (ITS); Testing; Conformance test specifications for Co-operative Awareness Messages (CAM); Part 1: Test requirements and Protocol Implementation Conformance Statement (PICS) proforma".

[10] ETSI TS 102 894-2 (V1.2.1): "Intelligent Transport Systems (ITS); Users and applications requirements; Part 2: Applications and facilities layer common data dictionary".

2.2 Informative references

References are either specific (identified by date of publication and/or edition number or version number) or non-specific. For specific references, only the cited version applies. For non-specific references, the latest version of the reference document (including any amendments) applies.

NOTE: While any hyperlinks included in this clause were valid at the time of publication, ETSI cannot guarantee their long term validity.

The following referenced documents are not necessary for the application of the present document but they assist the user with regard to a particular subject area.

[i.1] ETSI EG 202 798 (V1.1.1): "Intelligent Transport Systems (ITS); Testing; Framework for conformance and interoperability testing".

3 Definitions and abbreviations

3.1 Definitions

For the purposes of the present document, the terms and definitions given in ETSI EN 302 637-2 [1], ISO/IEC 9646-1 [2] and ISO/IEC 9646-7 [5] apply.

3.2 Abbreviations

For the purposes of the present document, the following abbreviations apply:

ASN	Abstract Syntax Notation
ASN.1	Abstract Syntax Notation One
ATM	Abstract Test Method
ATS	Abstract Test Suite
BV	valid test events for Behaviour tests
CA	Co-operative Awareness Basic Service
CAM	Cooperative Awareness Messages
CAN	Controller Area Network
CRS	Crash Status
FMT	Message Format
GFQ	Generation Frequency
INA	Information Adaptation
ISO	International Organization for Standardization
ITS	Intelligent Transport Systems
IUT	Implementation Under Test
LDM	Local Dynamic Map
MSD	Message Dissemination
MSG	Message Generation
MSP	Message Processing
MTC	Main Test Component
PCTR	Protocol Conformance Testing Report
PICS	Protocol Implementation Conformance Statement
PIXIT	Partial Protocol Implementation eXtra Information for Testing
PX	Pixit
SAP	Service Access Point
SCS	System Conformance Statement
SCTR	Static Conformance Test Report
SUT	System Under Test
TC	Test Case
TI	Timer tests
TP	Test Purposes
TSS	Test Suite Structure
TTCN	Testing and Test Control Notation

4 Abstract Test Method (ATM)

4.1 Abstract protocol tester

The abstract protocol tester used by this test suite is described in figure 1. The test system will simulate valid and invalid protocol behaviour, and will analyse the reaction of the IUT.

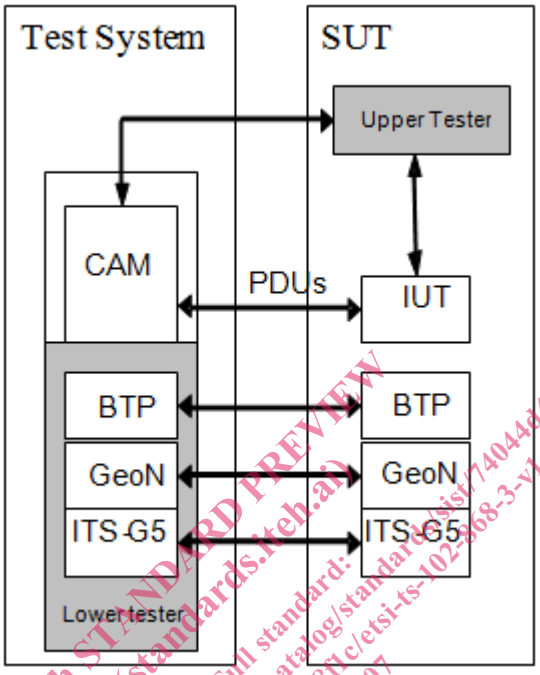

Figure 1: Abstract protocol tester - CA

4.2 Test Configuration

This test suite uses a unique test configuration in order to cover the different test scenarios. In this configuration, the tester simulates one ITS station implementing the CAM protocol.

4.3 Test architecture

The present document implements the general TTCN-3 test architecture described in ETSI EG 202 798 [i.1], clauses 6.3.2 and 8.3.1.

Figure 2 shows the test architecture used for the CA ATS. The CA test component requires using only the Main Test Component (MTC). The MTC communicates with the CA SUT over the camPort. The camPort is used to exchange CA protocol messages between the CA test component and the CA IUT.

The Upper tester entity in the SUT enables triggering CA functionalities by simulating primitives from application or LDM entities. It is required to trigger the CA layer in the SUT to send CA messages, which are resulting from upper layer primitives. Furthermore, receiving CA messages may result for the CA layer in sending primitives to the upper layer (sending Data to LDM for instance).

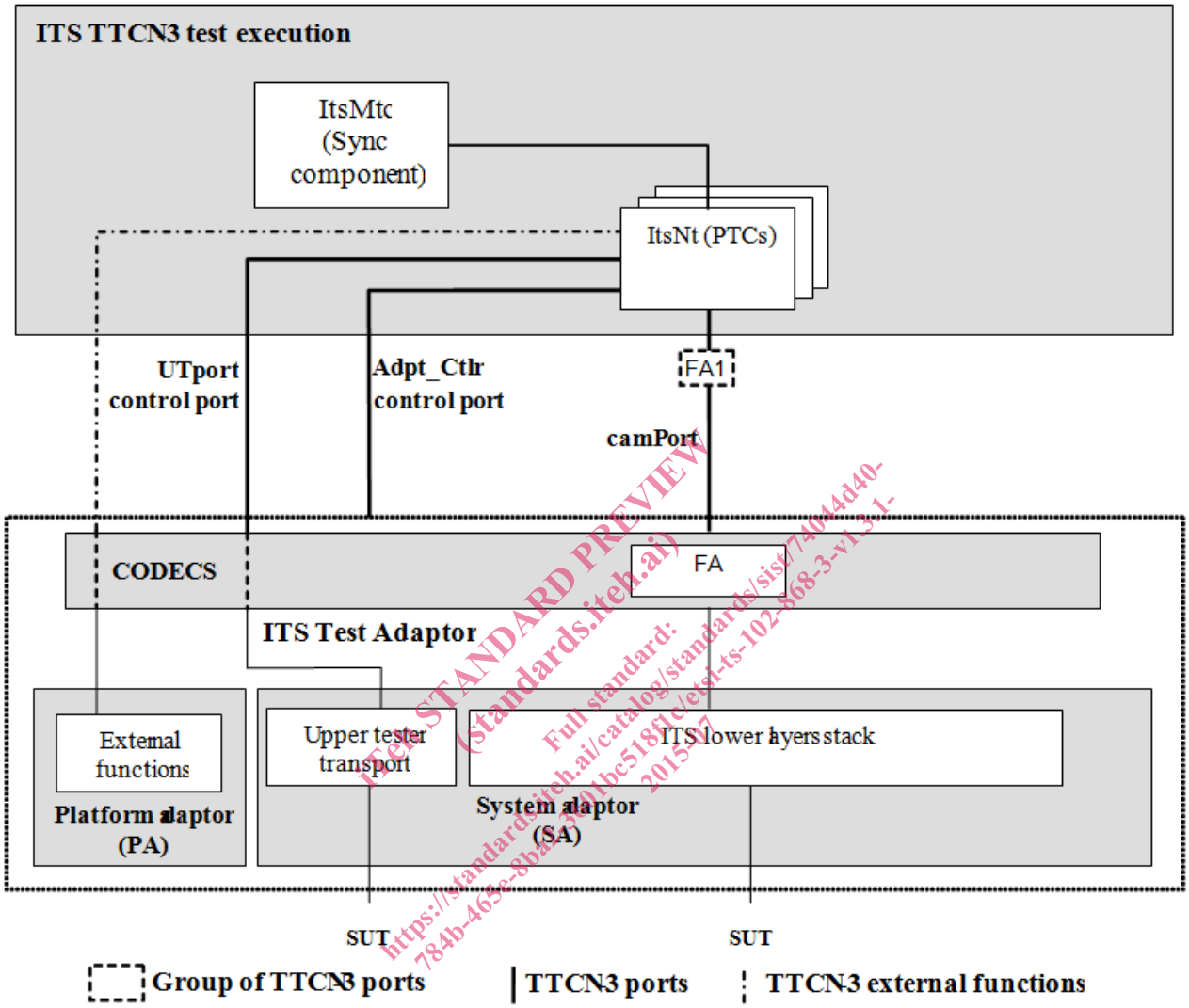

Figure 2: Test system architecture

4.4 Ports and ASPs (Abstract Services Primitives)

4.4.1 Introduction

Two ports are used by the CA ATS:

- The camPort, of type CamPort.
- The utPort, of type UpperTesterPort.

4.4.2 Primitives of the camPort

Two types of primitives are used in the camPort:

- The CamInd primitive used to receive messages of type CamPdu.
- The CamReq primitive used to send messages of type CamPdu.

These two primitives use the CamPdu type, which is declared in the CAM.asn ASN.1 module, following the ASN.1 definition from ETSI EN 302 637-2 [1].

```
CamPdu ::= SEQUENCE {
    header  ItsPduHeader,
    cam     CoopAwareness
}
```

4.4.3 Primitives of the utPort

This port uses two types of primitives:

- The UtInitialize primitive used to initialize IUT.
- The UtTrigger primitive used trigger upper layer events in IUT.

5 Untestable Test Purposes

Table 1 gives a list of TPs, which are not implemented in the ATS due to the chosen ATM or other restrictions.

Table 1: Untestable TP

Test purpose	Reason
TP/CAM/MSP/BV-02	NOT implemented - No security elements in the ATS

6 ATS conventions

6.1 Introduction

The ATS conventions are intended to give a better understanding of the ATS but they also describe the conventions made for the development of the ATS. These conventions shall be considered during any later maintenance or further development of the ATS.

The ATS conventions contain two clauses, the testing conventions and the naming conventions. The testing conventions describe the functional structure of the ATS. The naming conventions describe the structure of the naming of all ATS elements.

To define the ATS, the guidelines of the document ETSI ETS 300 406 [6] were considered.

6.2 Testing conventions

6.2.1 Testing states

6.2.1.1 Initial state

All test cases start with the function f_prInitialState. This function brings the IUT in an "initialized" state by invoking the upper tester primitive UtInitialize.

6.2.1.2 Final state

All test cases end with the function f_poDefault. This function brings the IUT back in an "idle" state. As no specific actions are required for the idle state in ETSI EN 302 637-2 [1], the function f_ poDefault does not invoke any action.

As necessary, further actions may be included in the f_poDefault function.

6.2.2 Message types - ASN.1 definitions

ASN.1 definitions from ETSI EN 302 637-2 [1] are directly imported in TTCN-3 using the ASN.1 import method specified in ETSI ES 201 873-7 [8].