ETSI GS ORI 002-2 V4.1.1 (2014-10)

GROUP SPECIFICATION

iTeh STANDARD PREVIEW
(standards.iteh.ai)
Full standard:
https://standards.iteh.ai/catalog/standards/sist/96a396fc-08e0-4368-af48-0ec56ff76f47/etsi-gs-ori-002-2-v4.1.1-2014-10

Open Radio equipment Interface (ORI);
ORI Interface Specification;
Part 2: Control and Management
(Release 4)

Disclaimer

This document has been produced and approved by the Open Radio equipment Interface (ORI) ETSI Industry Specification Group (ISG) and represents the views of those members who participated in this ISG.
It does not necessarily represent the views of the entire ETSI membership.

Reference
RGS/ORI-0018

Keywords
control, interface, management, radio

ETSI

650 Route des Lucioles
F-06921 Sophia Antipolis Cedex - FRANCE

Tel.: +33 4 92 94 42 00 Fax: +33 4 93 65 47 16

Siret N° 348 623 562 00017 - NAF 742 C
Association à but non lucratif enregistrée à la
Sous-Préfecture de Grasse (06) N° 7803/88

iTeh STANDARD PREVIEW
(standards.iteh.ai)
Full standard:
https://standards.iteh.ai/catalog/standards/sist/96a396fc-08e0-4368-af48-0e56ff761d7/etsi-gs-ori-002-2-v4.1.1-2014-10

Important notice

The present document can be downloaded from:
http://www.etsi.org

The present document may be made available in electronic versions and/or in print. The content of any electronic and/or print versions of the present document shall not be modified without the prior written authorization of ETSI. In case of any existing or perceived difference in contents between such versions and/or in print, the only prevailing document is the print of the Portable Document Format (PDF) version kept on a specific network drive within ETSI Secretariat.

Users of the present document should be aware that the document may be subject to revision or change of status. Information on the current status of this and other ETSI documents is available at
http://portal.etsi.org/tb/status/status.asp

If you find errors in the present document, please send your comment to one of the following services:
http://portal.etsi.org/chaircor/ETSI_support.asp

Copyright Notification

No part may be reproduced or utilized in any form or by any means, electronic or mechanical, including photocopying and microfilm except as authorized by written permission of ETSI.
The content of the PDF version shall not be modified without the written authorization of ETSI.
The copyright and the foregoing restriction extend to reproduction in all media.

© European Telecommunications Standards Institute 2014.
All rights reserved.

DECT™, **PLUGTESTS**™, **UMTS**™ and the ETSI logo are Trade Marks of ETSI registered for the benefit of its Members.
3GPP™ and **LTE**™ are Trade Marks of ETSI registered for the benefit of its Members and of the 3GPP Organizational Partners.
GSM® and the GSM logo are Trade Marks registered and owned by the GSM Association.

Contents

Intellectual Property Rights 8
Foreword 8
Modal verbs terminology 8
1 Scope 9
2 References 9
2.1 Normative references 9
2.2 Informative references 10
3 Definitions, symbols and abbreviations 10
3.1 Definitions 10
3.2 Symbols 11
3.3 Abbreviations 12
4 Introduction 13
5 C&M plane description 13
5.1 Protocol stack 13
5.2 C&M plane protocols 14
5.2.1 Ethernet / Fast C&M 14
5.2.2 IP 14
5.2.3 DHCP 14
5.2.4 TCP / UDP 14
5.2.5 FTP 15
5.2.6 ORI C&M Protocol (OCP) 15
5.2.7 AISG/3GPP Iuant interface support within ORI 15
5.3 OCP message encoding and object modelling 16
5.4 Vendor specific extensions 16
6 RE Resource Model and its related Management Functions 16
6.1 Introduction 16
6.2 Object types 18
6.3 Object lifecycle 18
6.4 Object naming / addressing 18
6.5 Object relations 20
6.6 Object parameters 21
6.6.1 Roles/Purposes of parameters 21
6.6.2 Parameter characterization 21
6.6.2.1 Object containment 21
6.6.2.2 Parameter Name 22
6.6.2.3 Parameter Type 22
6.6.2.4 Parameter Access 22
6.6.2.5 Default value 23
6.6.3 Void 23
6.6.4 Parameter access functions 23
6.7 Object states / State handling 23
6.7.1 State types / states 23
6.7.1.1 Administrative State (AST) 24
6.7.1.2 Functional state (FST) 25
6.7.1.3 Relationship between Administrative and Functional states 26
6.7.2 State management functions 27
6.7.3 Linkage between object state changes and fault reporting 27
6.8 Fault management 27
6.8.1 Fault States 28
6.8.2 Fault Severity 28
6.8.3 Fault Reporting 28
6.8.4 Fault History 29

iTeh STANDARD PREVIEW
(standards.iteh.ai)
Full standard:
https://standards.iteh.ai/catalog/standards/sist/96a396fc-08e0-4368-a4a8-0ec56f761d7/etsi-gs-ori-002-2-v4.1.1-2014-10

6.8.5 ORI Fault Types 29
6.8.6 Handling of Fault Reports by the REC 29
6.9 Performance Management 29
6.10 Logging 29
6.10.1 Log concept 29
6.10.2 Log types & content 30
6.10.3 Log categories 31
6.10.4 Log configuration and control 31
6.10.5 Log file naming 32
6.11 Vendor specific extensions to the resource model 32
6.11.1 Vendor specific parameters 33
6.11.2 Vendor specific object types 33
6.11.3 Vendor specific fault types 33

7 OCP format and encoding structure 34
7.1 Roles of REC/RE 34
7.2 Message format and encoding 34
7.2.1 Message types/handling 34
7.2.2 Encoding basis 35
7.2.3 Data types 35
7.2.4 Name spaces 38
7.2.5 Message structure 39
7.2.5.1 Message Header 39
7.2.5.2 Message body 40
7.2.5.3 OCP message 40
7.3 Transport protocol embedding 40
7.3.1 Message framing 40
7.4 Common default result codes 41
7.5 Default failure response message 42
7.5.1 Message parameter details 43
7.5.2 Message encoding 44

8 OCP Elementary Functions and Messages 45
8.1 Device management 45
8.1.1 Health Check 45
8.1.1.1 Success 45
8.1.1.2 Failure 45
8.1.1.3 Message Parameter Details 45
8.1.2 Set Time 47
8.1.2.1 Success 47
8.1.2.2 Failure 47
8.1.2.3 Message parameter details 47
8.1.2.4 Message encoding 48
8.1.3 RE Reset 48
8.1.3.1 Success 49
8.1.3.2 Failure 49
8.2 Software management 50
8.2.1 Version Query 50
8.2.1.1 Success 50
8.2.1.2 Failure 51
8.2.1.3 Message parameter details 51
8.2.1.4 Message encoding 51
8.2.2 Software Update Preparation 52
8.2.2.1 Success 53
8.2.2.2 Failure 53
8.2.2.3 Message parameter details 53
8.2.2.4 Message encoding 54
8.2.3 Software Download 54
8.2.3.1 Success 55
8.2.3.2 Failure 55
8.2.3.3 Message parameter details 55
8.2.3.4 Message encoding 56

iTeh STANDARD PREVIEW
(standards.iteh.ai)
Full standard:
https://standards.iteh.ai/catalog/standards/sist/96a396fc-08e0-4368-af48-0ec56f761d7/etsi-gs-ori-002-2-v4.1.1-2014-10

8.2.4 Software Activation 56
8.2.4.1 Success 57
8.2.4.2 Failure 57
8.2.4.3 Message parameter details 57
8.2.4.4 Message encoding 57
8.3 Configuration management 58
8.3.1 Object Parameter Reporting 58
8.3.1.1 Success 59
8.3.1.2 Failure 59
8.3.1.3 Message Parameter Details 60
8.3.1.4 Message encoding 60
8.3.2 Object Parameter Modification 62
8.3.2.1 Success 63
8.3.2.2 Failure 63
8.3.2.3 Message parameter details 64
8.3.2.4 Message encoding 65
8.4 Object lifecycle 67
8.4.1 Object Creation 67
8.4.1.1 Success 68
8.4.1.2 Failure 68
8.4.1.3 Message parameter details 69
8.4.1.4 Message encoding 70
8.4.2 Object Deletion 73
8.4.2.1 Success 73
8.4.2.2 Failure 73
8.4.2.3 Message parameter details 74
8.4.2.4 Message encoding 74
8.5 Object State management 75
8.5.1 Object State Reporting 75
8.5.1.1 Success 75
8.5.1.2 Failure 76
8.5.1.3 Event-triggered reporting of state change 76
8.5.1.4 Message parameters 77
8.5.1.5 Message encoding 78
8.5.2 Object State Modification 80
8.5.2.1 Success 80
8.5.2.2 Failure 81
8.5.2.3 Abnormal operation 81
8.5.2.4 Message parameter details 81
8.5.2.5 Message encoding 82
8.6 Fault management 84
8.6.1 Fault Reporting 84
8.6.1.1 Success 84
8.6.1.2 Failure 85
8.6.1.3 Event-triggered reporting 85
8.6.1.4 Message parameter details 85
8.6.1.5 Message encoding 86
8.7 Performance management 88
8.8 Logging 89
8.8.1 File Available Indication 89
8.8.1.1 Message Parameter details 89
8.8.1.2 Message encoding 89
8.8.2 File Upload 90
8.8.2.1 Success 91
8.8.2.2 Failure 91
8.8.2.3 File Upload Completion reporting 92
8.8.2.4 Message parameter details 92
8.8.2.5 Message encoding 93
8.8.3 Activate Configuration 95
8.8.3.1 Success 96
8.8.3.2 Failure 96
8.8.3.3 Activate Configuration completion reporting 96

iTeh STANDARD PREVIEW
(standards.iteh.ai)
Full standard:
https://standards.iteh.ai/catalog/standards/sist/96a396fc-08e0-4368-af48-0ec56f761f07/etsi-gs-ori-002-2-v4.1.1-2014-10

8.8.3.4 Message Parameter details 97
8.8.3.5 Message encoding 97
8.9 AISG specific procedures 100
8.9.1 Device scan 100
8.9.1.1 Success 100
8.9.1.2 Failure 101
8.9.1.3 Device Scan completion 101
8.9.1.4 Message parameter details 101
8.9.1.5 Message encoding 102
8.9.2 AISG Layer 7 message and Alarm transfer 103
8.9.2.1 AISG message transmission (between REC and RE) 104
8.9.2.1.1 Success 104
8.9.2.1.2 Failure 104
8.9.2.2 AISG ALD receive indication 105
8.9.2.3 Message parameter details 105
8.9.2.4 Message encoding 105

9 Specified object types/parameters and fault types 107
9.1 Specified object types and their associated parameters 107
9.1.1 RE Object 107
9.1.2 Physical Antenna Port Object 109
9.1.3 TxSigPath Object 109
9.1.4 RxSigPath Object 119
9.1.5 ORI Link Object 128
9.1.6 External Event Port Object 132
9.1.7 AISGPort Object 133
9.1.8 AISGALD Object 134
9.1.9 Log Object 137
9.1.10 Downlink Routed IQ Data sub-block object 140
9.1.11 Uplink Routed IQ Data Sub-block object 142
9.1.12 Downlink Routed Control Word Block object 145
9.1.13 Uplink Routed Control Word Block object 147
9.2 Specified fault types 149

10 RE management procedures 150
10.1 RE Device management 150
10.1.1 OCP layer establishment and supervision between REC and RE 150
10.1.1.1 DHCP options 154
10.1.1.2 TCP options 155
10.1.2 REC - RE alignment procedure 156
10.1.3 Software management 157
10.1.3.1 Software operation following RE reset 157
10.1.3.1.1 Normal operation 157
10.1.3.1.2 Abnormal operation 157
10.1.3.2 Void 157
10.1.3.3 REC<->RE Software Alignment 157
10.2 RE operation 158
10.2.1 Dynamic object initial status alignment 158
10.2.2 ORI link configuration 159
10.2.2.1 General 159
10.2.2.2 Transceiver module inserted during RE operation 159
10.2.3 ORI link maintenance 160
10.2.4 Delay calibration 161
10.2.5 Signal Path control (Cell configuration) 164
10.2.5.1 Signal Path setup 164
10.2.5.2 Modify a Signal Path parameter when locking required 166
10.2.5.3 Modify a Signal Path parameter when locking not required 169
10.2.5.4 Delete a Signal Path 170
10.2.5.5 Switch a Signal Path off and on 170
10.2.6 AISG/3GPP Iuant management 171
10.2.6.1 AISG/3GPP Iuant Layer 2 establishment 171
10.2.6.1.1 Layer 2 connection establishment using Device Scan 172

iTeh STANDARD PREVIEW
(standards.iteh.ai)
https://standards.iteh.ai/catalog/standards/sist/96a396fc-08e0-4361-8f48-0ec56ff761d7/etsi-gs-ori-002-2-v4.1.1-2014-10

10.2.6.1.2 Layer 2 connection establishment using AISGALD object creation requested by the REC 173
10.2.7 Management of traffic routing via the networking RE 174
10.2.7.1 IQ data sub-block routing.....174
10.2.7.1.1 Case 1: Chain configurations – identical line bit rates on ORI links terminating at the master and slave ports. 175
10.2.7.1.2 Case 2: Chain configurations - different line bit rates on ORI links terminating at the master and slave ports 176
10.2.7.1.3 Case 3: Tree configurations - identical line bit rates on ORI links terminating at the master and slave ports 177
10.2.7.1.4 Case 4: Tree configurations – different line bit rates on ORI links terminating at the master and slave ports 178
10.2.7.2 Control word block routing.....179
10.2.7.3 Setup of IQ data and control word routing in networking RE in multi-hop configuration.....180
10.2.8 IQ data compression 182

Annex A (informative): Example for a vendor specific parameter in the RE resource model.....183

Annex B (normative): ORI vendor codes.....184

History 185

iTeh STANDARD PREVIEW
(standards.iteh.ai)
Full standard:
https://standards.iteh.ai/catalog/standards/sist/96a396fc-08e0-4368-af48-0ec56ff761d7/etsi-gs-ori-002-2-v4.1.1-2014-10

Intellectual Property Rights

IPRs essential or potentially essential to the present document may have been declared to ETSI. The information pertaining to these essential IPRs, if any, is publicly available for **ETSI members and non-members**, and can be found in ETSI SR 000 314: *"Intellectual Property Rights (IPRs); Essential, or potentially Essential, IPRs notified to ETSI in respect of ETSI standards"*, which is available from the ETSI Secretariat. Latest updates are available on the ETSI Web server (http://ipr.etsi.org).

Pursuant to the ETSI IPR Policy, no investigation, including IPR searches, has been carried out by ETSI. No guarantee can be given as to the existence of other IPRs not referenced in ETSI SR 000 314 (or the updates on the ETSI Web server) which are, or may be, or may become, essential to the present document.

Foreword

This Group Specification (GS) has been produced by ETSI Industry Specification Group (ISG) Open Radio equipment Interface (ORI).

The present document is part 2 of a multi-part deliverable covering the ORI Interface Specification, as identified below:

Part 1: "Low Layers (Release 4)";

Part 2: "Control and Management (Release 4)".

Modal verbs terminology

In the present document "**shall**", "**shall not**", "**should**", "**should not**", "**may**", "**may not**", "**need**", "**need not**", "**will**", "**will not**", "**can**" and "**cannot**" are to be interpreted as described in clause 3.2 of the ETSI Drafting Rules (Verbal forms for the expression of provisions).

"**must**" and "**must not**" are **NOT** allowed in ETSI deliverables except when used in direct citation.

iTeh STANDARD PREVIEW
(standards.iteh.ai)
ETSI standard:
https://standards.iteh.ai/catalog/standards/sist/96a396fc-08e0-4368-af48-0ec56ff7f10c/etsi-gs-ori-002-2-v4.1.1-2014-10

1 Scope

The present document aims to define Control and Management plane functions and protocols, addressing, message format and coding of the Open Radio equipment Interface (ORI) for Release 4.

2 References

References are either specific (identified by date of publication and/or edition number or version number) or non-specific. For specific references, only the cited version applies. For non-specific references, the latest version of the reference document (including any amendments) applies.

Referenced documents which are not found to be publicly available in the expected location might be found at http://docbox.etsi.org/Reference.

NOTE: While any hyperlinks included in this clause were valid at the time of publication, ETSI cannot guarantee their long term validity.

2.1 Normative references

The following referenced documents are necessary for the application of the present document.

[1] "Common Public Radio Interface (CPRI); Interface Specification" V 6.0.

NOTE: Available at http://www.cpri.info/spec.html.

[2] ETSI GS ORI 001: "Open Radio equipment Interface (ORI); Requirements for Open Radio equipment Interface (ORI) (Release 4)".

[3] ETSI GS ORI 002-1: "Open Radio equipment Interface (ORI); ORI Interface Specification; Part 1: Low Layers (Release 4)".

[4] IEEE Std 802-2001: "IEEE Standard for Local and Metropolitan Area Networks: Overview and Architecture".

[5] W3C Recommendation 28 October 2004: "XML Schema" (part 0 to 2).

NOTE: Part 0: Primer Second Edition http://www.w3.org/TR/2004/REC-xmlschema-0-20041028/
Part 1: Structures Second Edition http://www.w3.org/TR/2004/REC-xmlschema-1-20041028/
Part 2: Datatypes Second Edition http://www.w3.org/TR/2004/REC-xmlschema-2-20041028/

[6] The Unicode Consortium: "The Unicode Standard V6.0.0"; edited by Julie D. Allen ... [et al.]. Version 6.0, February 2011, ISBN 978-1-936213-01-6.

NOTE: http://www.unicode.org/versions/Unicode6.0.0/.

[7] W3C Recommendation 26 November 2008: "The Extensible Markup Language (XML) 1.0" Fifth Edition.

NOTE: http://www.w3.org/TR/2008/REC-xml-20081126/.

[8] IETF RFC 2045 (1996): "Multipurpose Internet Mail Extensions (MIME) Part One: Format of Internet Message Bodies".

NOTE: http://www.ietf.org/rfc/rfc2045.txt.

[9] ETSI TS 125 461 (V10.2.0): "Universal Mobile Telecommunications System (UMTS); UTRAN Iuant interface: Layer 1 (3GPP TS 25.461 version 10.2.0 Release 10)".

[10] ETSI TS 125 462 (V10.1.0): "Universal Mobile Telecommunications System (UMTS); UTRAN Iuant interface: Signalling transport (3GPP TS 25.462 version 10.1.0 Release 10)".

iTeh STANDARD PREVIEW
(standards.iteh.ai)
Full standard:
https://standards.iteh.ai/catalog/standards/sist/96a396fc-08e9-4368-a148-0ec56f761d7/etsi-gs-ori-002-2-v4.1.1-2014-10

[11] ETSI TS 125 466 (V10.3.0): "Universal Mobile Telecommunications System (UMTS); UTRAN Iuant interface: Application part (3GPP TS 25.466 version 10.3.0 Release 10)".

[12] Antenna Interface Standards Group, Standard No. AISG v2.0, 13th June 2006: "Control interfaces for antenna line devices".

NOTE: Available at www.aisg.org.uk.

[13] ETSI TS 125 215: "Universal Mobile Telecommunications System (UMTS); Physical layer; Measurements (FDD) (3GPP TS 25.215)".

[14] IETF RFC 959: "File Transfer Protocol".

[15] ISO/IEC 13239 (2002): "Information technology - Telecommunications and information exchange between systems - High-level data link control (HDLC) procedures".

[16] IETF RFC 2131: "Dynamic Host Configuration Protocol".

[17] IETF RFC 2132: "DHCP Options and BOOTP Vendor Extensions".

[18] IETF RFC 793: "Transmission Control Protocol".

[19] ETSI TS 125 104: "Universal Mobile Telecommunications System (UMTS); Base Station (BS) radio transmission and reception (FDD) (3GPP TS 25.104)".

[20] ETSI TS 136 104: "LTE; Evolved Universal Terrestrial Radio Access (E-UTRA); Base Station (BS) radio transmission and reception (3GPP TS 36.104)".

[21] IETF RFC 950: "Internet Standard Subnetting Procedure".

[22] ETSI TS 136 211: "LTE; Evolved Universal Terrestrial Radio Access (E-UTRA); Physical channels and modulation (3GPP TS 36.211)".

[23] ETSI TS 145 005: "GSM/EDGE Radio Access Network; Radio transmission and reception (3GPP TS 45.005)".

[24] IETF RFC 826: "An Ethernet Address Resolution Protocol -- or -- Converting Network Protocol Addresses to 48.bit Ethernet Address for Transmission on Ethernet Hardware".

iTeh STANDARD PREVIEW
(standards.iteh.ai)
Full standard:
https://standards.iteh.ai/catalog/standards/sist/96a396fc-08e04368-af4f-0ec56ff761d7/etsi-gs-ori-002-2-v4.1.1-2014-10

2.2 Informative references

The following referenced documents are not necessary for the application of the present document but they assist the user with regard to a particular subject area.

[i.1] The Apache Software Foundation: "Apache log4cxx™ for C++".

NOTE: http://logging.apache.org/log4cxx/index.html

3 Definitions, symbols and abbreviations

3.1 Definitions

For the purposes of the present document, the following terms and definitions apply:

active link: See definition in [2].

active software image: software image that is currently being executed on the RE

Antenna Line Device (ALD): See definition in [12].

Antenna-Carrier (AxC): See clause 2.1 of [1].

DHCP client: See definition in [16].

DHCP server: See definition in [16].

FTP password: See definition in [14].

FTP server IP address: See definition in [14].

FTP username: See definition in [14].

universally unique MAC address: 48 bit universally administered, globally unique identifier in compliance with MAC-48/EUI-48 format assigned to a network interface, as defined in IEEE Std 802-2001 [4]

HDLC control octet: See definition in [15].

I-frame: See definition in [15].

networking RE: See definition in [2].

ORI line bit rate: See definition in [3].

ORI link: See definition in [2].

ORI port: See definition in [2].

passive link: See definition in [2].

passive software image: software image that is not currently being executed on the RE

radio standard: standardized radio access technology (e.g. UMTS, LTE, GSM)

Received Total Wideband Power (RTWP): See [13].

software image: software stored on the RE as a result of a successful software upgrade that is compatible with the RE hardware version

software upgrade package version identifier: information exchanged between the REC and the RE to identify the Software Upgrade Package

software upgrade package: unique set of (one or several) files provided by the RE vendor for the purpose of performing a software upgrade of one or more RE hardware versions provided by the same RE vendor, and associated with a maximum of one Software Image on the RE

NOTE 1: The RE vendor should provide flexibility for supporting Software Upgrade Packages containing software for multiple hardware versions and Software Upgrade Packages containing software for a single Hardware version.

NOTE 2: Even if one of the files of a set changes, a new software upgrade package is created.

TCP socket: See definition in [18].

transceiver module: module that may be used to connect the internal circuits of the RE to the Layer 1 (see ETSI GS ORI 002-1 [3]) of the ORI link

Uplink Automatic Gain Control (UL AGC): See definition in [3].

3.2 Symbols

For the purposes of the present document, the following symbols apply:

AxC	Antenna-Carrier
Rx	Receiver
Tc	UTRA FDD chip period (1/3,84 MHz)
T_{HCI}	Health Check Idle timer
T_{TLM}	TCP Link Monitoring Timer

iTeh STANDARD PREVIEW
(standards.iteh.ai)
Full standard:
https://standards.iteh.ai/catalog/standards/sist/96a396fc-08e0-4f68-af48-0ec56ff761d7/etsi-gs-ori-002-2-v4.1.1-2014-10

Tx Transmitterσ Parameter used within the IQ data compression/decompression process

NOTE: See further description of its usage in [3].

3.3 Abbreviations

For the purposes of the present document, the following abbreviations apply:

3GPP	3rd Generation Partnership Project
AGC	Automatic Gain Control
AISG	Antenna Interface Standards Group
ALD	Antenna Line Device
ASCII	American Standard Code for Information Interchange
ARP	Address Resolution Protocol
AST	Administrative State
AxC	Antenna-Carrier
C&M	Control & Management
CET	Central European Time
CPRI	Common Public Radio Interface
DHCP	Dynamic Host Control Protocol
DL	DownLink
EARFCN	E-UTRA Absolute Radio Frequency Channel Number
EBNF	Extended Backus-Naur Form
E-UTRA	Evolved-UMTS Terrestrial Radio Access
FCS	Frame Check Sequence
FDD	Frequency Division Duplex
FST	Functional STate
FTP	File Transfer Protocol
GSM	Global System for Mobile communications (Groupe Spécial Mobile)
HDLC	High Level Data Link Control
HFN	Hyper Frame Number

NOTE: As defined in [1].

ID	Identifier
IE	Information Element
IETF	Internet Engineering Task Force
IP	Internet Protocol
IQ	In-phase data and Quadrature data
KPI	Key Performance Indicator
LAN	Local Area Network
LED	Light Emitting Diode
LOF	Loss Of Frame
LOS	Loss Of Signal
MAC	Media Access Control
MIMO	Multiple-Input Multiple-Output
MTU	Maximum Transmission Unit
O&M	Operations & Maintenance
OCP	ORI C&M Protocol
ORI	Open Radio Interface
OS	Operating System
PA	Power Amplifier
RAI	Remote Alarm Indication
RE	Radio Equipment
REC	Radio Equipment Controller
RF	Radio Frequency
RMS	Root Mean Square
RO	Read-Only
RTWP	Received Total Wideband Power
RW	Read Write
SAP	Service Access Point

iTeh STANDARD PREVIEW
(standards.iteh.ai)
Full standard:
https://standards.iteh.ai/catalog/standards/sist/96a396fc-8e0-4f68-af48-0ec56ff761d7/etsi-gs-ori-002-2-v4.1.1-2014-10

SDI	SAP Defect Indication
SSH	Secure SHell
TCP	Transmission Connection Protocol
TMA	Tower-Mounted Amplifier
UARFCN	UTRA Absolute Radio Frequency Channel Number
UDP	User Datagram Protocol
UID	Unique IDentifier
UL AGC	Uplink Automatic Gain Control
UL	UpLink
UTC	Coordinated Universal Time
UTF	Unicode Transformation Format
UTRA	UMTS Terrestrial Radio Access
VSWR	Voltage Standing Wave Ratio
XID	eXchange Identification

NOTE: As defined in [15].

XML	eXtensible Markup Language
XSD	XML Schema Definition

4 Introduction

The present document is a subset of the ORI Release 3 specifications.

5 C&M plane description

5.1 Protocol stack

The C&M plane protocol stack that shall be supported by REC and RE within the overall ORI protocol stack, is shown in figure 5.1-1 and complies with [1], clause 4.1.

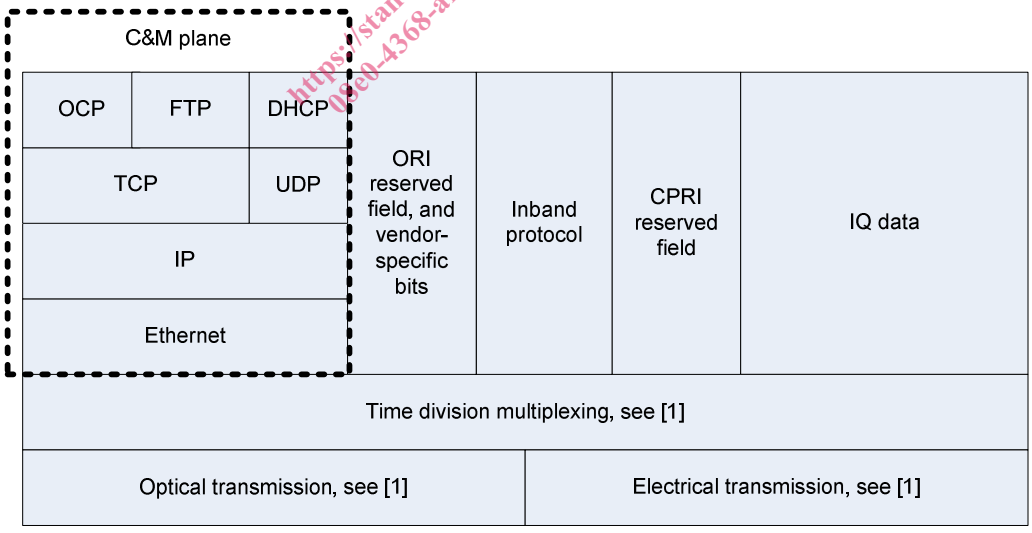

Figure 5.1-1: ORI protocol stack highlighting C&M plane

The IQ data, CPRI reserved field, Vendor-specific bits (a subset of which are used for the ORI reserved field), and Inband protocol, are as defined in [1]. The ORI reserved field itself is defined in [3].

The use of Ethernet, IP, TCP, DHCP, FTP and OCP (ORI C&M Protocol) within the C&M plane is described in clause 5.2.

Further details of OCP are defined in clauses 7, 8 and 10.

iTeh STANDARD PREVIEW
(standards.iteh.ai)
Full standard:
https://standards.iteh.ai/catalog/standards/sist/96a396fc-08e0-4368-af48-0ec6ff761d7/etsi-gs-ori-002-2-v4.1.1-2014-10