INTERNATIONAL STANDARD

ISO 28703

First edition
2011-08-15

Fine ceramics (advanced ceramics, advanced technical ceramics) — Test method for thermal-shock resistance of porous ceramics

Céramiques techniques — Méthode d'essai de la résistance au choc thermique des céramiques poreuses

iTeh STANDARD PREVIEW
(standards.iteh.ai)

ISO 28703:2011
https://standards.iteh.ai/catalog/standards/sist/b0c58433-b8d0-4046-b15e-c3af43c337e5/iso-28703-2011

Reference number
ISO 28703:2011(E)

© ISO 2011

iTeh STANDARD PREVIEW
(standards.iteh.ai)
ISO 28703:2011
https://standards.iteh.ai/catalog/standards/sist/b0c58433-b8d0-4046-b15e-c3af43c337e5/iso-28703-2011



COPYRIGHT PROTECTED DOCUMENT

© ISO 2011

All rights reserved. Unless otherwise specified, no part of this publication may be reproduced or utilized in any form or by any means, electronic or mechanical, including photocopying and microfilm, without permission in writing from either ISO at the address below or ISO's member body in the country of the requester.

ISO copyright office
Case postale 56 • CH-1211 Geneva 20
Tel. + 41 22 749 01 11
Fax + 41 22 749 09 47
E-mail copyright@iso.org
Web www.iso.org

Published in Switzerland

© ISO 2011 – All rights reserved

Contents

Page

Foreword iv

1 Scope 1

2 Normative references 1

3 Terms and definitions 1

4 Principle 2

5 Apparatus 2
5.1 Electric furnace 2
5.2 Cooling bath 2
5.3 Temperature-measuring device 2
5.4 Vernier callipers 3
5.5 Micrometer callipers 3
5.6 Thermocouples 3

6 Test specimens 3
6.1 Shape and size 3
6.2 Pretreatment 3
6.3 Number of specimens 3

7 Procedure 3

8 Bending test 4
8.1 Bending strength 4
8.2 Mean bending strength 5

9 Thermal-shock resistance 5

10 Test report 5

iTeh STANDARD PREVIEW
(standards.iteh.ai)
ISO 28703:2011
https://standards.iteh.ai/catalog/standards/sist/b0c58433-b8d0-4046-b15e-c3af43c337e5/iso-28703-2011

© ISO 2011 – All rights reserved

Foreword

ISO (the International Organization for Standardization) is a worldwide federation of national standards bodies (ISO member bodies). The work of preparing International Standards is normally carried out through ISO technical committees. Each member body interested in a subject for which a technical committee has been established has the right to be represented on that committee. International organizations, governmental and non-governmental, in liaison with ISO, also take part in the work. ISO collaborates closely with the International Electrotechnical Commission (IEC) on all matters of electrotechnical standardization.

International Standards are drafted in accordance with the rules given in the ISO/IEC Directives, Part 2.

The main task of technical committees is to prepare International Standards. Draft International Standards adopted by the technical committees are circulated to the member bodies for voting. Publication as an International Standard requires approval by at least 75 % of the member bodies casting a vote.

Attention is drawn to the possibility that some of the elements of this document may be the subject of patent rights. ISO shall not be held responsible for identifying any or all such patent rights.

ISO 28703 was prepared by Technical Committee ISO/TC 206, *Fine ceramics*.

iTeh STANDARD PREVIEW
(standards.iteh.ai)
ISO 28703:2011
https://standards.iteh.ai/catalog/standards/sist/b0c58433-b8d0-4046-b15e-c3af43c337e5/iso-28703-2011

© ISO 2011 – All rights reserved

Fine ceramics (advanced ceramics, advanced technical ceramics) — Test method for thermal-shock resistance of porous ceramics

1 Scope

This International Standard specifies a test method for determining the thermal-shock resistance of porous ceramics by water quenching using the bending strength. This test method can be used for selection of materials during design.

NOTE 1 There are three kinds of test methods for thermal shock, namely a rapid cooling method, a rapid heating method, and the rapid heating-cooling method. Ceramics are sensitive to tensile stress, and the surface region has many defects which act as the starting points to which strength falls. For this reason, the rapid cooling method where the maximum tensile stress is generated on the surface serves as the severest test condition for ceramics. Therefore, this International Standard specifies the rapid cooling method.

NOTE 2 In many thermal-shock test methods, liquid or gas is needed as a cooling medium, and liquid is more efficient than gas in the cooling capability. Therefore, in this International Standard, water is specified as a cooling medium.

2 Normative references

iTeh STANDARD PREVIEW
(standards.iteh.ai)

The following referenced documents are indispensable for the application of this document. For dated references, only the edition cited applies. For undated references, the latest edition of the referenced document (including any amendments) applies.

ISO 28703:2011
https://standards.iteh.ai/catalog/standards/sist/b0c56455-88d0-4046-815e-c3af43c337e5/iso-28703-2011

ISO 1101, *Geometrical Product Specifications (GPS) — Geometrical tolerancing — Tolerances of form, orientation, location and run-out*

ISO 3599, *Vernier callipers reading to 0,1 and 0,05 mm*

ISO 3611, *Geometrical product specifications (GPS) — Dimensional measuring equipment: Micrometers for external measurements — Design and metrological characteristics*

ISO 4287, *Geometrical Product Specifications (GPS) — Surface texture: Profile method — Terms, definitions and surface texture parameters*

ISO 14704, *Fine ceramics (advanced ceramics, advanced technical ceramics) — Test method for flexural strength of monolithic ceramics at room temperature*

ISO 20507, *Fine ceramics (advanced ceramics, advanced technical ceramics) — Vocabulary*

IEC 60584-1, *Thermocouples — Part 1: Reference tables*

3 Terms and definitions

For the purposes of this document, the terms and definitions in ISO 20507 and the following apply.

3.1
porous ceramics
ceramics with a porosity of typically 30 % to 60 % and a pore diameter of 1 µm to 100 µm, for applications such as filters, catalyst carriers, humidity sensors or molecular sieves, excluding structural honeycomb cellular channels

© ISO 2011 – All rights reserved

3.2
thermal shock
phenomenon generating impulsive thermal stress due to the large temperature difference in a material by rapid heating or cooling

3.3
thermal-shock temperature difference
temperature difference between a material and the environment at thermal shock

3.4
residual bending strength
bending strength of a material after the thermal-shock test

3.5
decreasing ratio of residual bending strength
ratio of the amount of reduced bending strength after testing to the mean bending strength before testing

3.6
maximum permissible temperature difference
maximum thermal-shock temperature difference that does not significantly reduce the residual bending strength after thermal-shock testing

4 Principle

The resistance of a material to thermal shock is estimated by the maximum thermal-shock temperature difference which the material can withstand without its residual bending strength being significantly affected. The data such as residual bending strength and maximum permissible temperature difference shall not be used directly for the design of materials and components.

iTeh STANDARD PREVIEW
(standards.iteh.ai)

5 Apparatus

ISO 28703:2011
https://standards.iteh.ai/catalog/standards/sist/b0c58433-b8d0-4046-b15e-c3af43c337e5/iso-28703-2011

5.1 Electric furnace

Specimens are heated in a electric furnace with a temperature accuracy of ±2 K (±2 °C). When multiple specimens are heated at the same time, the temperature of the furnace shall be able to be controlled uniformly around the location where the specimens are situated.

The design of the furnace shall allow a rapid and smooth transfer of the heated specimens from the hot furnace chamber to the cooling bath. When a furnace such as the rapid radiation type is used, it is important for good accuracy of the results to minimize the temperature differences of the locations where specimens are set.

5.2 Cooling bath

The cooling bath shall use a controller to maintain uniform water temperature within ±2 K (±2 °C) during the test. Mechanical mixing or agitation shall ensure uniformity in a water temperature within ±2 K (±2 °C) throughout the bath.

NOTE Temperature differences in the water influence the stress at a thermal shock. Therefore, in this International Standard, only the cooling bath with apparatus to control the water at a uniform temperature is allowed.

5.3 Temperature-measuring device

Temperature-measuring devices which are used to measure the temperature of specimens in the electric furnace and to control the electric furnace itself shall have the temperature sensors (thermocouples, etc.) located in the position nearest to the specimens.

© ISO 2011 – All rights reserved

5.4 Vernier callipers

Vernier callipers with the same accuracy of minimum reading of 0,05 mm as specified in ISO 3599, or more, shall be used.

5.5 Micrometer callipers

Micrometer callipers for measurement of external dimensions with the same accuracy as specified in ISO 3611, or better, shall be used.

5.6 Thermocouples

Thermocouples with the same accuracy as Type K Class 1 specified in IEC 60584-1, or better, shall be used.

6 Test specimens

6.1 Shape and size

Specimens are made by cutting out from actual components or by a particular process. A particular process must guarantee specimens made by it to be equivalent to those made by cutting from actual components, and the process must be the same as that used in making the components. The shape of the specimen shall be a rectangular prism with a rectangular cross-section. The standard dimensions of the specimen are $b = (8{,}0 \pm 0{,}1)$ mm in width, $h = (6{,}0 \pm 0{,}1)$ mm in thickness and $L = 70$ mm or more in length. Parallelism of the upper and lower surfaces shall be under 0,02 mm as specified in ISO 1101. The surfaces of specimen shall be finished by a grindstone with a grain number of #800 or finer. Four corners of longitudinal direction are chamfered with $c = 0{,}1$ mm ~ 0,3 mm. In spite of the former provision, chamfering can be neglected for specimens with grains larger than 0,1 mm.

iTeh STANDARD PREVIEW
(standards.iteh.ai)
ISO 28703:2011
https://standards.iteh.ai/catalog/standards/sist/b0c58433-b8d0-4046-b15e-c3af43c337e5/iso-28703-2011

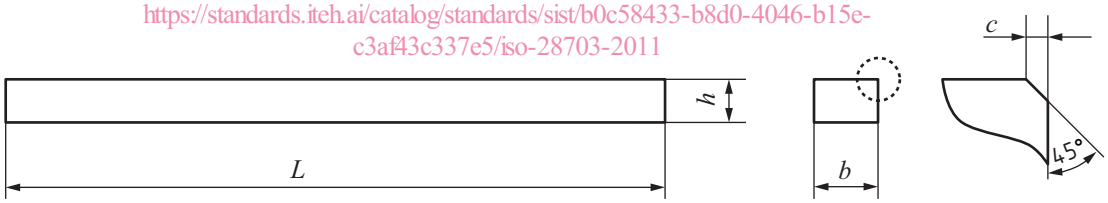

Figure 1 — Specimen dimensions and chamfering of ridge line

6.2 Pretreatment

Contamination by wax, if any, should be removed by organic solution or by heating at 773 K (500 °C) for 1 h to evaporate wax.

6.3 Number of specimens

Use a minimum of five specimens for each thermal condition.

NOTE Ceramics are materials with a large scatter in strength. When the smallest number of specimens is used in the thermal-shock test, a large scattering is obtained for the temperature difference for the reduction of residual strength. Therefore, the number of specimens for each temperature condition is specified to be at least five in this International Standard. However, around the temperatures for determining the maximum permissible temperature difference, it is desirable for the number of test specimens to be 10 or more.

7 Procedure

7.1 Measure the width b and thickness h of the test specimens in advance, using a vernier calliper or micrometer.

© ISO 2011 – All rights reserved

7.2 After setting the test specimen in a uniform temperature region in the electric furnace, heat the test specimen to the testing temperature at a rate between 10 K/min (10 °C/min) and 30 K/min (30 °C/min).

NOTE In the heating process, it is necessary to consider the heating rate at which thermal stress does not occur in the test specimen, and to avoid rapid heating.

7.3 After holding for 15 min to 30 min at a predetermined temperature, the test specimen is put into a cooling-water tub quickly and is cooled promptly. The temperature of water which is a cooling medium is maintained at (293 ± 3) K [(20 ± 3) °C].

NOTE The test specimen is generally thrown or dropped into the cooling water, and quenched.

7.4 The test specimen under the cooling water is taken out from the water after cooling for 5 s to 10 s. When taking out the next test specimen and putting it into a cooling bath at a specific time, more than a 10 min interval is needed after the temperature of the cooling water is constant.

7.5 First determine a value of thermal-shock temperature difference for which the average value of the residual bending strength does not decrease. Repeat the test with increased values of thermal-shock temperature difference until the decrease in the average value of residual bending strength is 30 % or more. Use at least five specimens for each temperature difference.

8 Bending test

The test specimen that was given a thermal shock shall be dried out at 383 K (110 °C) for 2 h. Next, the four-point bending test shall be conducted on the test specimen, the residual bending strength is measured, and the average value is calculated. The four-point bending fixture of similar construction to that shown in ISO 14704 shall be used (see Figure 2). A distance between the outer supporting points L_2 shall be (60,0 ± 0,5) mm, and a distance between the inner supporting points L_1 shall be (30,0 ± 0,5) mm. The radius of curvature at the inner and outer supports shall be 4,0 mm to 6,0 mm, and its surface roughness, Ra, as specified in ISO 4287, shall be, at most, 0,40 μm. The crosshead speed of the testing machine shall be 0,5 mm/min.

iTeh STANDARD PREVIEW
(standards.iteh.ai)
ISO 28703:2011
https://standards.iteh.ai/catalog/standards/sist/b0e58433-b8d0-4046-b15e-c3af43c337e5/iso-28703-2011

8.1 Bending strength

The bending strength σ_B is calculated from the measured value P of the destructive load acquired by the four-point bending test. P is the maximum load at which the test specimen breaks.

$$\sigma_B = \frac{3P(L_2 - L_1)}{2bh^2} \quad (1)$$

where b is the width of the test specimen, and h is the thickness of the test specimen (see Figure 1).

© ISO 2011 – All rights reserved

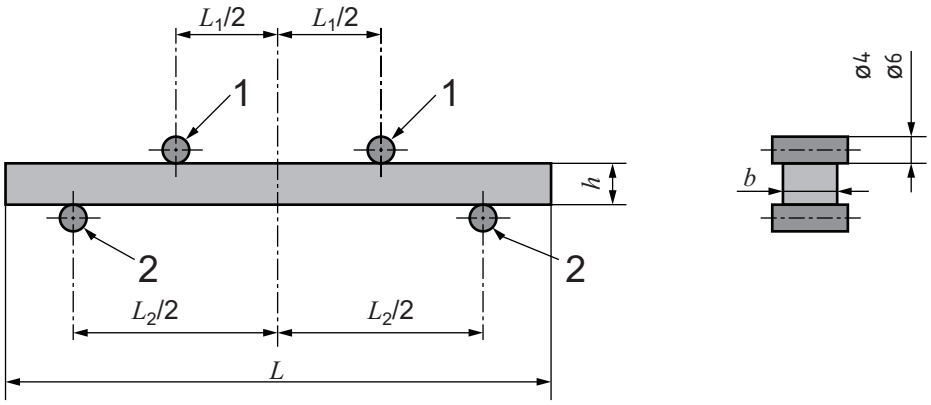

Key

1 inner supports

2 outer supports

Figure 2 — Four-point bending fixture

8.2 Mean bending strength

The average value σ_m of the bending strength is calculated by the arithmetic average.

iTeh STANDARD PREVIEW
(standards.iteh.ai)

9 Thermal-shock resistance

The maximum permissible temperature difference is used as the evaluation index of thermal-shock resistance. This maximum value of ΔT_c is calculated by averaging the value of ΔT_1 for which the averaged strength-decreasing ratio is less than 5 % and the value of ΔT_2 for which the decreasing ratio of the averaged residual strength is greater than 10 % to 15 %. The decreasing ratio σ^* of residual strength is calculated by the following equation.

$$\sigma^* = \frac{\sigma_{mo} - \sigma_{mth}}{\sigma_{mo}} \tag{2}$$

Here, σ_{mo} is the average value of the bending strength on test specimens which were not subjected to any thermal shock, and σ_{mth} is the mean value of the residual bending strength on the test specimens after a thermal shock.

Calculate the maximum permissible temperature difference ΔT_c according to the following equation.

$$\Delta T_c = \frac{\Delta T_1 + \Delta T_2}{2} \tag{3}$$

In a thermal-shock test, many test specimens for the testing are needed. Therefore, if the range of thermal-shock temperature difference at which the residual bending strength falls is estimated beforehand, the test can be done efficiently. As for the range of temperature interval for a thermal-shock temperature difference, a 100 K (100 °C) grade is recommended as a standard value. However, the temperature difference just before and after the maximum permissible temperature difference should be less than 50 K (50 °C).

NOTE From the thermal-shock test results on test specimens with the size specified in this International Standard, the maximum permissible temperature difference to the specific test specimen size is estimated. By this, it becomes the evaluation index for the thermal-shock resistant property as the characteristic comparison in materials.

10 Test report

© ISO 2011 – All rights reserved