ETSI TS 102 869-3 V1.5.1 (2017-03)

Intelligent Transport Systems (ITS);
Testing;
Conformance test specifications for
Decentralized Environmental Notification
Basic Service (DEN);
Part 3: Abstract Test Suite (ATS) and
Protocol Implementation eXtra Information for Testing (PIXIT)

Reference
RTS/ITS-00174

Keywords
ATS, ITS, PIXIT, testing

ETSI

650 Route des Lucioles
F-06921 Sophia Antipolis Cedex - FRANCE

Tel.: +33 4 92 94 42 00 Fax: +33 4 93 65 47 16

Siret N° 348 623 562 00017 - NAF 742 C
Association à but non lucratif enregistrée à la
Sous-Préfecture de Grasse (06) N° 7803/88

Important notice

The present document can be downloaded from:
http://www.etsi.org/standards-search

The present document may be made available in electronic versions and/or in print. The content of any electronic and/or print versions of the present document shall not be modified without the prior written authorization of ETSI. In case of any existing or perceived difference in contents between such versions and/or in print, the only prevailing document is the print of the Portable Document Format (PDF) version kept on a specific network drive within ETSI Secretariat.

Users of the present document should be aware that the document may be subject to revision or change of status. Information on the current status of this and other ETSI documents is available at
https://portal.etsi.org/TB/ETSIDeliverableStatus.aspx

If you find errors in the present document, please send your comment to one of the following services:
https://portal.etsi.org/People/CommiteeSupportStaff.aspx

Copyright Notification

Contents

Intellectual Property Rights

IPRs essential or potentially essential to the present document may have been declared to ETSI. The information pertaining to these essential IPRs, if any, is publicly available for **ETSI members and non-members**, and can be found in ETSI SR 000 314: *"Intellectual Property Rights (IPRs); Essential, or potentially Essential, IPRs notified to ETSI in respect of ETSI standards"*, which is available from the ETSI Secretariat. Latest updates are available on the ETSI Web server (https://ipr.etsi.org/).

Pursuant to the ETSI IPR Policy, no investigation, including IPR searches, has been carried out by ETSI. No guarantee can be given as to the existence of other IPRs not referenced in ETSI SR 000 314 (or the updates on the ETSI Web server) which are, or may be, or may become, essential to the present document.

Foreword

This Technical Specification (TS) has been produced by ETSI Technical Committee Intelligent Transport Systems (ITS).

The present document is part 3 of a multi-part deliverable covering Conformance test specifications for Decentralized Environmental Notification Basic Service (DEN) as identified below:

Part 1: "Test requirements and Protocol Implementation Conformance Statement (PICS) pro forma";

Part 2: "Test Suite Structure and Test Purposes (TSS & TP)";

Part 3: "Abstract Test Suite (ATS) and Protocol Implementation eXtra Information for Testing (PIXIT)".

The development of ITS test specifications follows the guidance provided in the ETSI EG 202 798 [i.1]. Therefore, the ATS documentation outlined in the present document is also based on the guidance provided in ETSI EG 202 798 [i.1].

Modal verbs terminology

In the present document "**shall**", "**shall not**", "**should**", "**should not**", "**may**", "**need not**", "**will**", "**will not**", "**can**" and "**cannot**" are to be interpreted as described in clause 3.2 of the ETSI Drafting Rules (Verbal forms for the expression of provisions).

"**must**" and "**must not**" are **NOT** allowed in ETSI deliverables except when used in direct citation.

1 Scope

The present document contains the Abstract Test Suite (ATS) for Decentralized Environmental Notification Basic Service (DEN) as defined in ETSI EN 302 637-3 [1] in compliance with the relevant requirements and in accordance with the relevant guidance given in ISO/IEC 9646-7 [i.7].

The objective of the present document is to provide a basis for conformance tests for Decentralized Environmental Notification Basic Service (DEN) equipment giving a high probability of interoperability between different manufacturers' equipment.

The ISO standards for the methodology of conformance testing (ISO/IEC 9646-1 [i.4] and ISO/IEC 9646-2 [i.5]) as well as the ETSI rules for conformance testing (ETSI ETS 300 406 [i.8]) are used as a basis for the test methodology.

2 References

2.1 Normative references

References are either specific (identified by date of publication and/or edition number or version number) or non-specific. For specific references, only the cited version applies. For non-specific references, the latest version of the referenced document (including any amendments) applies.

Referenced documents which are not found to be publicly available in the expected location might be found at http://docbox.etsi.org/Reference.

NOTE: While any hyperlinks included in this clause were valid at the time of publication, ETSI cannot guarantee their long term validity.

The following referenced documents are necessary for the application of the present document.

[1] ETSI EN 302 637-3 (V1.2.2): "Intelligent Transport Systems (ITS); Vehicular Communications; Basic Set of Applications; Part 3: Specifications of Decentralized Environmental Notification Basic Service".

[2] ETSI TS 102 869-1 (V1.5.1): "Intelligent Transport Systems (ITS); Testing; Conformance test specifications for Decentralized Environmental Notification Basic Service (DEN); Part 1: Test requirements and Protocol Implementation Conformance Statement (PICS) pro forma".

[3] ETSI TS 102 869-2 (V1.5.1): "Intelligent Transport Systems (ITS); Testing; Conformance test specifications for Decentralized Environmental Notification Basic Service (DEN); Part 2: Test Suite Structure and Test Purposes (TSS & TP)".

[4] ETSI TS 102 894-2 (V1.2.1): "Intelligent Transport Systems (ITS); Users and applications requirements; Part 2: Applications and facilities layer common data dictionary".

2.2 Informative references

References are either specific (identified by date of publication and/or edition number or version number) or non-specific. For specific references, only the cited version applies. For non-specific references, the latest version of the referenced document (including any amendments) applies.

NOTE: While any hyperlinks included in this clause were valid at the time of publication, ETSI cannot guarantee their long term validity.

The following referenced documents are not necessary for the application of the present document but they assist the user with regard to a particular subject area.

[i.1] ETSI EG 202 798 (V1.1.1): "Intelligent Transport Systems (ITS); Testing; Framework for conformance and interoperability testing".

[i.2] ETSI TS 103 096-3 (V1.3.1): "Intelligent Transport Systems (ITS); Testing; Conformance test specifications for ITS Security; Part 3: Abstract Test Suite (ATS) and Protocol Implementation eXtra Information for Testing (PIXIT)".

[i.3] ETSI TR 103 099 (V1.4.1): "Intelligent Transport Systems (ITS); Architecture of conformance validation framework".

[i.4] ISO/IEC 9646-1 (1994): "Information technology -- Open Systems Interconnection -- Conformance testing methodology and framework -- Part 1: General concepts".

[i.5] ISO/IEC 9646-2 (1994): "Information technology -- Open Systems Interconnection -- Conformance testing methodology and framework -- Part 2: Abstract Test Suite specification".

[i.6] ISO/IEC 9646-6 (1994): "Information technology -- Open Systems Interconnection -- Conformance testing methodology and framework -- Part 6: Protocol profile test specification".

[i.7] ISO/IEC 9646-7 (1995): "Information technology -- Open Systems Interconnection -- Conformance testing methodology and framework -- Part 7: Implementation Conformance Statements".

[i.8] ETSI ETS 300 406 (1995): "Methods for testing and Specification (MTS); Protocol and profile conformance testing specifications; Standardization methodology".

[i.9] ETSI ES 201 873-1 (V4.5.1): "Methods for Testing and Specification (MTS); The Testing and Test Control Notation version 3; Part 1: TTCN-3 Core Language".

[i.10] ETSI ES 201 873-7 (V4.5.1): "Methods for Testing and Specification (MTS); The Testing and Test Control Notation version 3; Part 7: Using ASN.1 with TTCN-3".

3 Definitions and abbreviations

3.1 Definitions

For the purposes of the present document, the terms and definitions given in ETSI EN 302 637-3 [1], ISO/IEC 9646-1 [i.4] and ISO/IEC 9646-7 [i.7] apply.

3.2 Abbreviations

For the purposes of the present document, the following abbreviations apply:

ASN.1	Abstract Syntax Notation One
ATM	Abstract Test Method
ATS	Abstract Test Suite
BV	valid test events for Behaviour tests
CAN	Controller Area Network
DEN	Decentralized Environmental Notification Basic Service
DENM	Decentralized Environmental Notification Message
DRCX	DENM Reception
EG	ETSI Guide
EN	European Norm
ES	ETSI Standard
EXTI	Expiration Time
GNSS	Global Navigation Satellite System
ISO	International Organization for Standardization
ITS	Intelligent Transport Systems
IUT	Implementation Under Test
LDM	Local Dynamic Map
MSGF	Message Format
MTC	Main Test Component
PCTR	Protocol Conformance Test Report

PETY	Periodicity
PICS	Protocol Implementation Conformance Statement
PIXIT	Partial Protocol Implementation eXtra Information for Testing
PX	Pixit
SA	System Adaptor
SAP	Service Access Point
SCS	System Conformance Statement
SCTR	Static Conformance Test Report
SLCI	Specific Location Container Information
SSCI	Specific Situation Container Information
SSP	Specific Service Permission
SUT	System Under Test
TC	Test Case
TDEV	Two different events
TI	Timer tests
TNEV	Termination/Negation of an Event
TP	Test Purposes
TS	Technical Specification
TSS	Test Suite Structure
TTCN	Testing and Test Control Notation

4 Abstract Test Method (ATM)

4.1 Abstract protocol tester

The abstract protocol tester used by this test suite is described in figure 1. The test system simulates valid and invalid protocol behaviour, and analyses the reaction of the IUT.

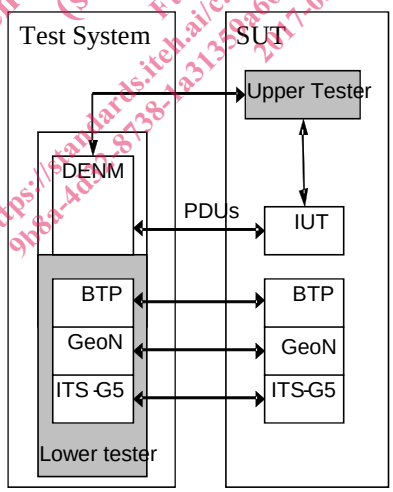

Figure 1: Abstract protocol tester - DEN

4.2 Test Configuration

This test suite uses a unique test configuration in order to cover the different test scenarios. In this configuration, the tester simulates one ITS station implementing the DEN protocol.

4.3 Test architecture

The present document implements the general TTCN-3 test architecture described in ETSI EG 202 798 [i.1], clauses 6.3.2 and 8.3.1.

Figure 2 shows the test architecture used in for the DEN ATS. The DEN test component requires using only the Main Test Component (MTC). The MTC communicates with the DEN SUT over the denmPort. The denmPort is used to exchange DEN protocol messages between the DEN test component and the DEN IUT.

The Upper tester entity in the SUT enables triggering DEN functionalities by simulating primitives from application or LDM entities. It is required to trigger the DEN layer in the SUT to send DEN messages, which are resulting from upper layer primitives. Furthermore, receiving DEN messages may result for the DEN layer in sending primitives to the upper layer (sending Data to LDM, for instance).

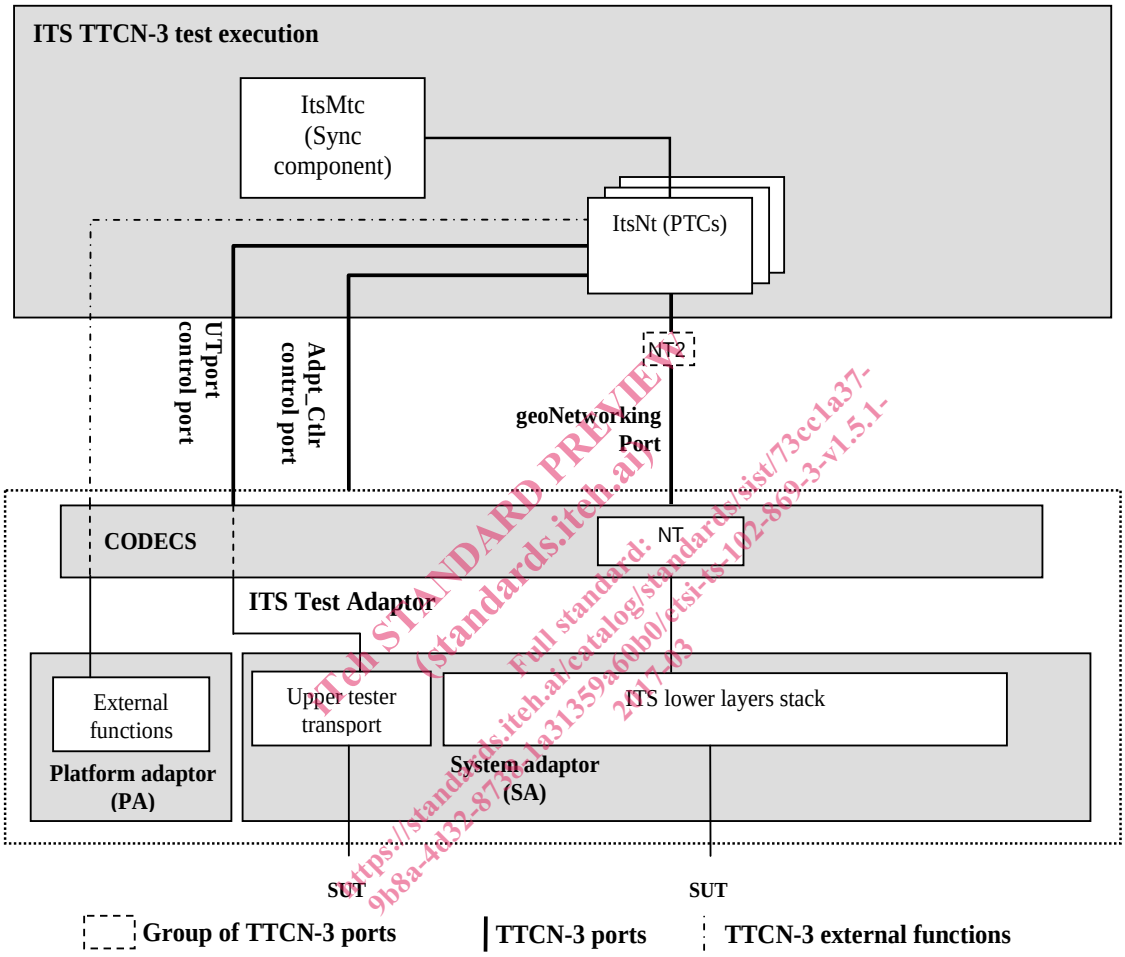

Figure 2: Test system architecture

4.4 Ports and ASPs (Abstract Services Primitives)

4.4.1 Introduction

Two ports are used by the DEN ATS:

- The denmPort, of type DenmPort.
- The utPort of type UpperTesterPort.

4.4.2 Primitives of the denmPort

Two types of primitives are used in the denmPort:

- The DenmInd primitive, containing the received messages of type DenmPdu, and a timestamp corresponding to the receipt time.
- The DenmReq primitive containing the sent messages of type DenmPdu.

The DenmPdu type is declared in the DENM.asn ASN.1 module, following the ASN.1 definition from ETSI EN 302 637-3 [1].

```
DenmPdu ::= SEQUENCE {
    header  ItsPduHeader,
    denm    DecentralizedEnvironmentalNotificationMessage
}
```

4.4.3 Primitives of the utPort

This port uses two types of primitives:

- The UtInitialize primitive used to initialize IUT.
- The UtTrigger primitive used trigger upper layer events in IUT.

4.5 Executing DEN tests in secured mode

All the DEN tests, with the exception of the SSP tests, can be executed with security enabled or with security disabled. The choice of running the DEN tests in secured or non-secured mode has no impact on the result of the DEN tests because the test verdicts assess DEN protocol behaviour only.

The SSP tests can only be executed in secured mode.

The choice of running the DEN tests in secured or non-secured mode can be controlled via the test suite parameter PICS_IS_IUT_SECURED, see table A.3/1 of ETSI TS 102 869-1 [2].

Before running the DEN tests in secured mode, the following steps need to be executed:

- security certificates need to be generated for the tester as well as for the IUT, see ETSI TS 103 096-3 [i.2], clause 5.3.2.5;
- security certificates need to be installed onto the IUT, see ETSI TS 103 096-3 [i.2], clause 5.3.2.6;
- in case of usage of the ETSI test adapter, the following test adapter parameters need to be configured:

Test adapter parameter	Default value	Comment
TsSecuredRootPath	data/certificates	The path to the location where all certificates (tester and IUT certificates) are installed
TsSecuredConfigId	void	Name of the subfolder in TsSecuredRootPath in order to organize multiple IUTs
UtSecuredMode	FALSE	To use upper-tester interface in non-secured mode

4.6 ETSI test adapter

All information of the ETSI test adapter is described in ETSI TR 103 099 [i.3].