SLOVENSKI STANDARD
SIST EN 848-3:2000

01-april-2000

Safety of woodworking machines - One side moulding machines with rotating tool - Part 3: Numerical control (NC) boring machines and routing machines

Safety of woodworking machines - One side moulding machines with rotating tool - Part 3: Numerical control (NC) boring machines and routing machines

Sicherheit von Holzbearbeitungsmaschinen - Fräsmaschinen für einseitige Bearbeitung mit drehendem Werkzeug - Teil 3: NC-Bohr- und Fräsmaschinen

Sécurité des machines pour le travail du bois - Machines a fraiser sur une face a outil rotatif - Partie 3: Perceuses et défonceuses a commande numérique

Ta slovenski standard je istoveten z: EN 848-3:1999

ICS:

25.040.20	Številčno krmiljeni stroji	Numerically controlled machines
79.120.10	Lesnoobdelovalni stroji	Woodworking machines

SIST EN 848-3:2000 **en**

EUROPEAN STANDARD
NORME EUROPÉENNE
EUROPÄISCHE NORM

EN 848-3

September 1999

ICS 79.120.10

English version

Safety of woodworking machines - One side moulding machines with rotating tool - Part 3: Numerical control (NC) boring machines and routing machines

Sécurité des machines pour le travail du bois - Machines à fraiser sur une face à outil rotatif - Partie 3: Perceuses et défonceuses à commande numérique

Sicherheit von Holzbearbeitungsmaschinen - Fräsmaschinen für einseitige Bearbeitung mit drehendem Werkzeug - Teil 3: NC-Bohr- und Fräsmaschinen

This European Standard was approved by CEN on 1 July 1999.

CEN members are bound to comply with the CEN/CENELEC Internal Regulations which stipulate the conditions for giving this European Standard the status of a national standard without any alteration. Up-to-date lists and bibliographical references concerning such national standards may be obtained on application to the Central Secretariat or to any CEN member.

This European Standard exists in three official versions (English, French, German). A version in any other language made by translation under the responsibility of a CEN member into its own language and notified to the Central Secretariat has the same status as the official versions.

CEN members are the national standards bodies of Austria, Belgium, Czech Republic, Denmark, Finland, France, Germany, Greece, Iceland, Ireland, Italy, Luxembourg, Netherlands, Norway, Portugal, Spain, Sweden, Switzerland and United Kingdom.

EUROPEAN COMMITTEE FOR STANDARDIZATION
COMITÉ EUROPÉEN DE NORMALISATION
EUROPÄISCHES KOMITEE FÜR NORMUNG

Central Secretariat: rue de Stassart, 36 B-1050 Brussels

Ref. No. EN 848-3:1999 E

Contents

Foreword

This European Standard has been prepared by Technical Committee CEN/TC 142 "Woodworking machines - Safety", the secretariat of which is held by BSI.

This European Standard shall be given the status of a national standard, either by publication of an identical text or by endorsement, at the latest by March 2000, and conflicting national standards shall be withdrawn at the latest by March 2000.

This European Standard has been prepared under a mandate given to CEN by the European Commission and the European Free Trade Association, and supports essential requirements of EU Directive(s).

For relationship with EU Directive(s), see informative Annex ZA, which is an integral part of this standard.

According to the CEN/CENELEC Internal Regulations, the national standards organizations of the following countries are bound to implement this European Standard: Austria, Belgium, Czech Republic, Denmark, Finland, France, Germany, Greece, Iceland, Ireland, Italy, Luxembourg, Netherlands, Norway, Portugal, Spain, Sweden, Switzerland and the United Kingdom.

Organisations contributing to the preparation of the European Standard include the European Manufacturers Association "EUMABOIS".

Normative and informative annexes to this standard are listed in the contents list.

The European Standards produced by CEN/TC 142 are particular to woodworking machines and complement the relevant A and B Standards on the subject of general safety (see introduction of EN 292-1 : 1991 for a description of A, B and C standards).

Introduction

This standard has been prepared to be a harmonised standard to provide one means of conforming to the essential safety requirements of the Machinery Directive and associated EFTA Regulations.

This European standard is a type C standard as defined in EN 292-1 : 1991.

The extent to which hazards are covered is indicated in the scope of this standard.

The requirements of this standard concern designers, manufacturers, suppliers and importers of NC boring machines and routing machines.

This standard also includes information to be provided by the manufacturer to the user.

Common requirements for tooling are given in EN 847-1 : 1997.

1 Scope

This European Standard sets out the requirements and/or measures to remove the hazards and limit the risk on NC boring machines and NC routing machines (as defined in 3.1) herein after referred to as "machines" designed to cut solid wood, chip board, fibreboard, plywood and also these materials where these are covered with plastic laminate or edgings.

This European standard covers all the hazards relevant to this machine which are listed in clause 4. This European standard does not cover the hazards related to Electromagnetic compatibility (EMC) as stated in the EMC directive 89/336 EEC dated 03.05.89.

This European standard does not apply to NC, boring and routing machines with edge banding facilities.

This standard is primarily directed to machines which are manufactured after the date of issue of this standard.

2 Normative references

This European Standard incorporates by dated or undated references provisions from other publications. These normative references are cited at the appropriate places in the text and the publications are listed hereafter. For dated references subsequent amendments to or revisions of any of these publications apply to this European Standard only when incorporated in it by amendment or revision. For undated references the latest edition of the publication referred to applies.

EN 292-1	1991	Safety of machinery - Basic concepts - General principles for design - Part 1 : Basic terminology, methodology
EN 292-2 EN 292-2/A1	1991 1995	Safety of machinery - Basic concepts - General principles for design - Part 2 : Technical principles and specifications
EN 294	1992	Safety of machines - Safety distances to prevent danger zones being reached by the upper limbs
EN 349	1993	Safety of machines - Minimum distances to avoid crushing of parts of the human body
EN 418	1992	Safety of machines - Emergency stop equipment - Functional aspects - Principles for design
EN 614-1	1995	Safety of machinery - Ergonomic design principles - Part 1: Terminology and general principles
EN 847-1	1997	Tools for woodworking - Safety requirements - Part 1 : Milling tools and circular saw blades
prEN 847-2		Tools for woodworking - Safety requirements - Part 2 : Requirements for the shank of shank mounted milling tools
EN 894-1	1997	Safety of machinery - Ergonomics requirements for the design of display and control actuators - Part 1 : General principles for human interactions with displays and control actuators

EN 894-2	1997	Safety of machinery - Ergonomics requirements for the design of display and control actuators - Part 2 : Displays
prEN 894-3		Safety of machinery - Ergonomics requirements for the design of display and control actuators - Part 3 : Control actuators
EN 953	1997	Safety of machinery - General requirements for the design and construction of guards (fixed, movable)
EN 954-1	1996	Safety of machinery - Safety related parts of control systems - Part 1 : General principles for design
EN 982	1996	Safety requirements for fluid power systems and components - Hydraulics
EN 983	1996	Safety requirements for fluid power systems and components - Pneumatics
prEN 1005-1		Safety of machinery - Human physical performance - Part 1 : Terms and definitions
prEN 1005-2		Safety of machinery - Human physical performance - Part 2 : Manual handling of objects associated to machinery
prEN 1005-3		Safety of machinery - Human physical performance - Part 3 : Recommended force limits for machinery operation
EN 1037	1995	Safety of Machinery - Prevention of unexpected start up
EN 1050	1996	Safety of machinery - Principles for risk assessments
EN 1088	1995	Safety of machinery - Interlocking devices with and without guard locking - General principles and specifications for design
EN 1760-1	1997	Safety of Machinery - Pressure sensitive protective devices - Part 1 : General principles for the design and testing of pressure sensing mats and pressure sensing floors
prEN 1760-3		Safety of Machinery - Pressure sensitive protective devices - Part 3 : General principles for the design and testing of pressure sensing bumpers
prEN 1837		Safety of machinery - Integral lighting of machines
EN 60204-1	1992	Safety of machinery - Electrical equipment of machines - Part 1 : General requirements (IEC 204-1 : 1992, modified)
EN 60529	1991	Degree of protection provided by enclosures (IP code) (IEC 529 : 1989)
EN 60825-1	1994	Safety of laser products - Part 1 : Equipment classification requirements and user's guide (IEC 825-1 : 1993)

EN 60947-4-1	1992	Low voltage switch gear and control gear - Part 4 : Contactors and motor starters - Section 1 : Electromechanical contactors and motor starters (IEC 947-4-1 : 1990)
EN 60947-5-1	1991	Low voltage switch gear and control gear - Part 5 : Control circuit devices and switching elements - Section 1 : Electromechanical control circuit devices (IEC 947-5-1 : 1990)
EN 61496-1	1997	Safety of machinery - Electrosensitive protective equipment - Part 1 : General requirements and test (IEC 496-1 : 1997)
EN ISO 3743-1	1995	Acoustics - Determination of sound power levels of noise sources - Engineering methods for small movable sources in reverberant fields - Part 1 : Comparison method for hard wall test rooms (ISO 3743-1 : 1994)
EN ISO 3743-2	1996	Acoustics - Determination of sound power levels of noise sources - Engineering methods for small movable sources in reverberant fields - Part 2 : Method for special reverberation test rooms (ISO 3743-2 : 1994)
EN ISO 3744	1995	Acoustics - Determination of sound power levels of noise sources using sound pressure - Engineering method in an essentially free field over a reflecting plane (ISO 3744 : 1994)
EN ISO 3746	1995	Acoustics - Determination of sound power levels of noise sources using sound pressure - Survey method using an enveloping measurement surface over a reflecting plane (ISO 3746 : 1995)
EN ISO 4871	1997	Acoustics - Declaration and verification of noise emission values of machinery and equipment (ISO 4871 : 1996)
EN ISO 9614-1	1995	Acoustics - Determination of sound power levels of noise sources using sound intensity - Part 1 : Measurement at discreet points (ISO 9614-1 : 1993)
EN ISO 11201	1995	Acoustics - Noise emitted by machinery and equipment - Measurement of emission sound pressure levels at a work station and at other specified positions - Engineering method in an essentially free field over a reflecting plane (ISO 11201 : 1995)
EN ISO 11202	1995	Acoustics - Noise emitted by machinery and equipment - Measurement of emission sound pressure levels at a work station and at other specified positions - Survey method (in situ) (ISO 11202 : 1995)
EN ISO 11204	1995	Acoustics - Noise emitted by machinery and equipment - Measurement of emission sound pressure levels at the work station and at other specified positions - Method requiring environmental corrections (ISO 11204 : 1995)
ISO 3745	1977	Acoustics - Determination of sound power levels of noise sources - Precision methods for anechoic and semi-anechoic rooms

ISO 7984	1988	Woodworking machines - Technical classification of wood working machines and auxiliary machines for woodworking
ISO/TR 11688-1	1995	Acoustics - Recommended practice for the design of low-noise machinery and equipment - Part 1 : Planing
HD 21.1 S3	1997	Polyvinyl chloride insulated cables of rated voltages up to and including 450/750 V - Part 1 : General requirements
HD 22.2 S3	1997	Rubber insulated cables of rated voltages up to and including 450/750 V - Part 2 : General requirements

3 Definitions

In addition to the definitions given in EN 292-1 : 1991, EN 292-2 : 1991 and EN 418 : 1992 for the purpose of this standard the following definitions apply :

3.1 numerically controlled (NC) boring and routing machines

Integrated fed machines designed for the machining of workpieces by the use of milling and/or boring tools. These machines have at least two square axes programmable by the user (e.g. X, Y) for positioning and/or machining. The axes operate in accordance with a NC workprogramme.

The machine may have :

- additional units for sawing sanding, etc.;
- fixed or movable workpiece support;
- mechanical, pneumatic, hydraulic or vacuum workpiece clamping;
- automatic tool change facilities.

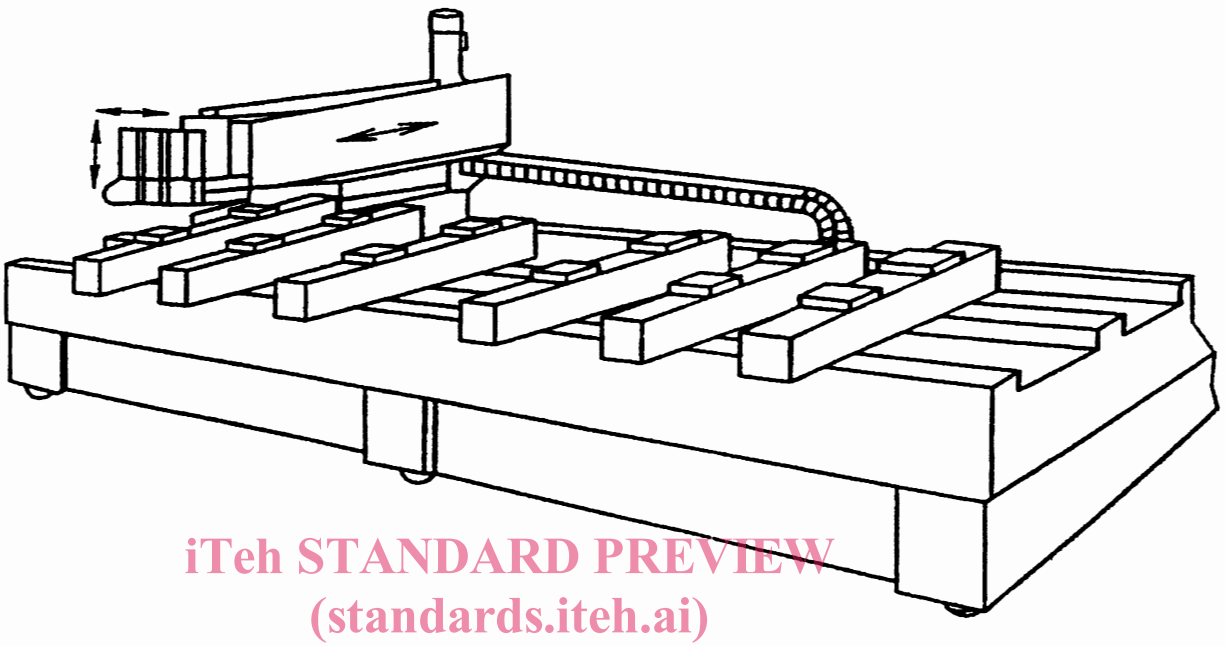

Figure 1 : "C" frame machine (fixed table, moveable head)[1)]

1) Safeguarding devices are not illustrated

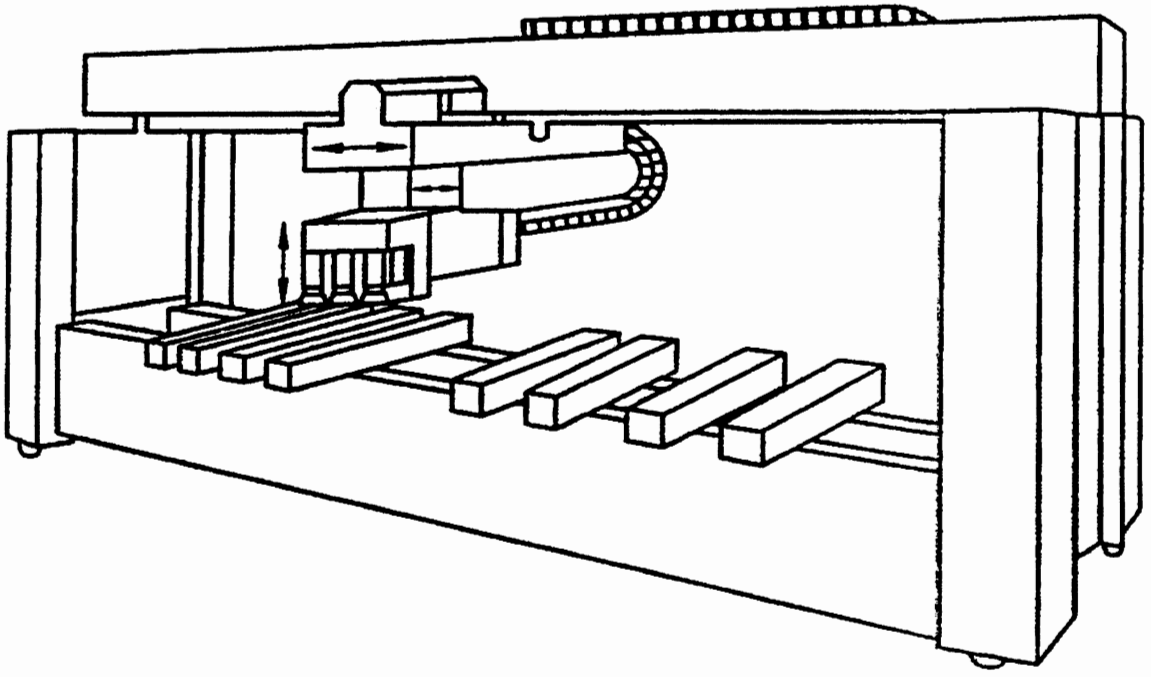

Figure 2 : Portal frame machine[1)]

1) Safeguarding devices are not illustrated

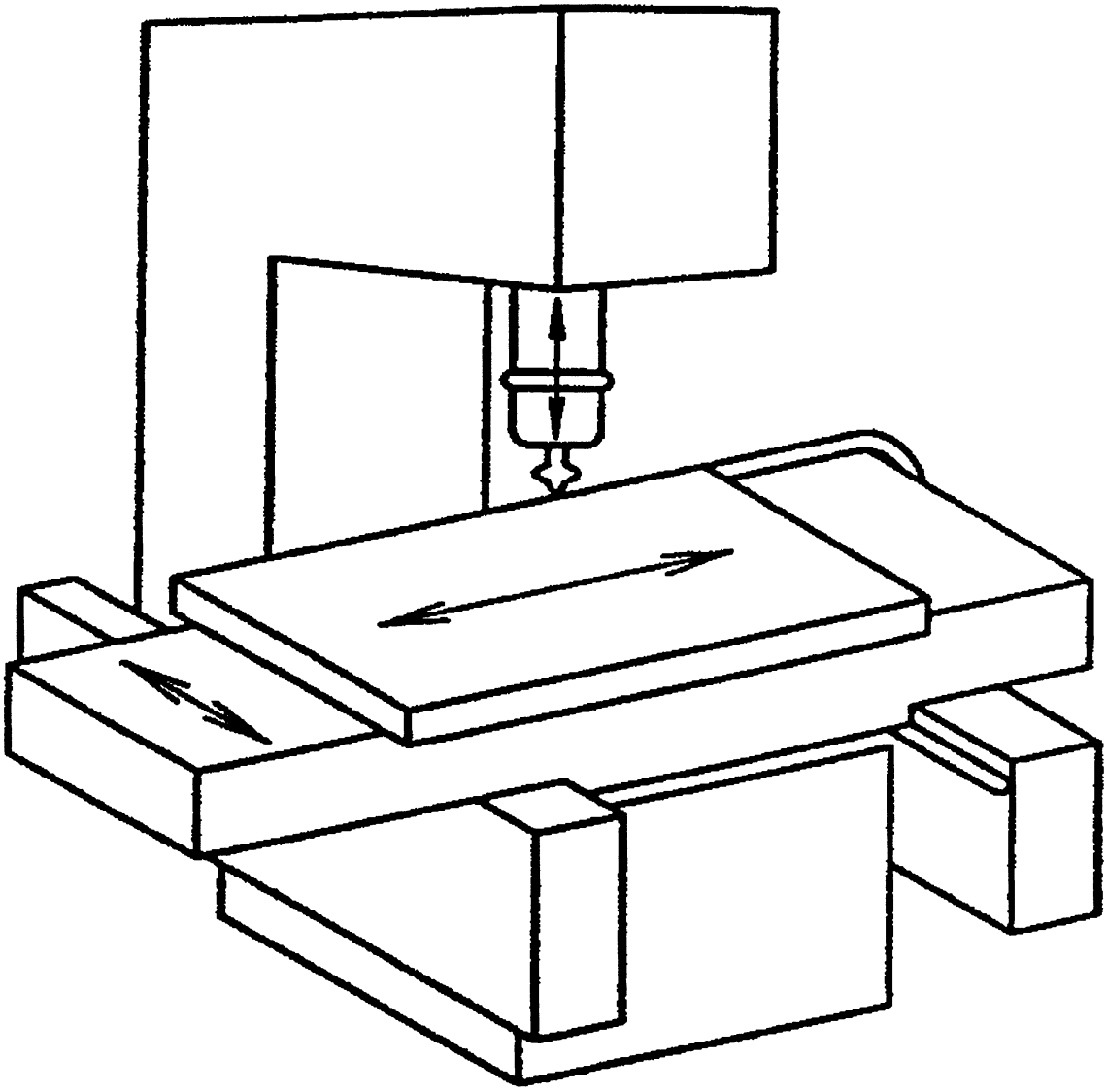

Figure 3 : Overhead router (moving table)[1)]

1) Safeguarding devices are not illustrated

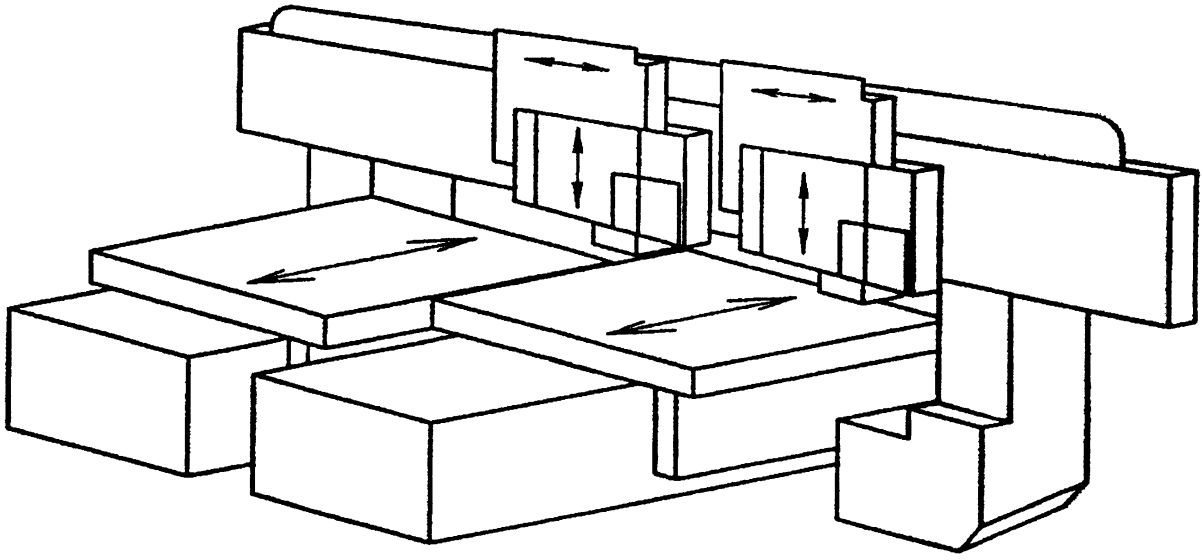

Figure 4 : Overhead router (moving tables, fixed portal, moving heads)[1)]

1) Safeguarding devices are not illustrated

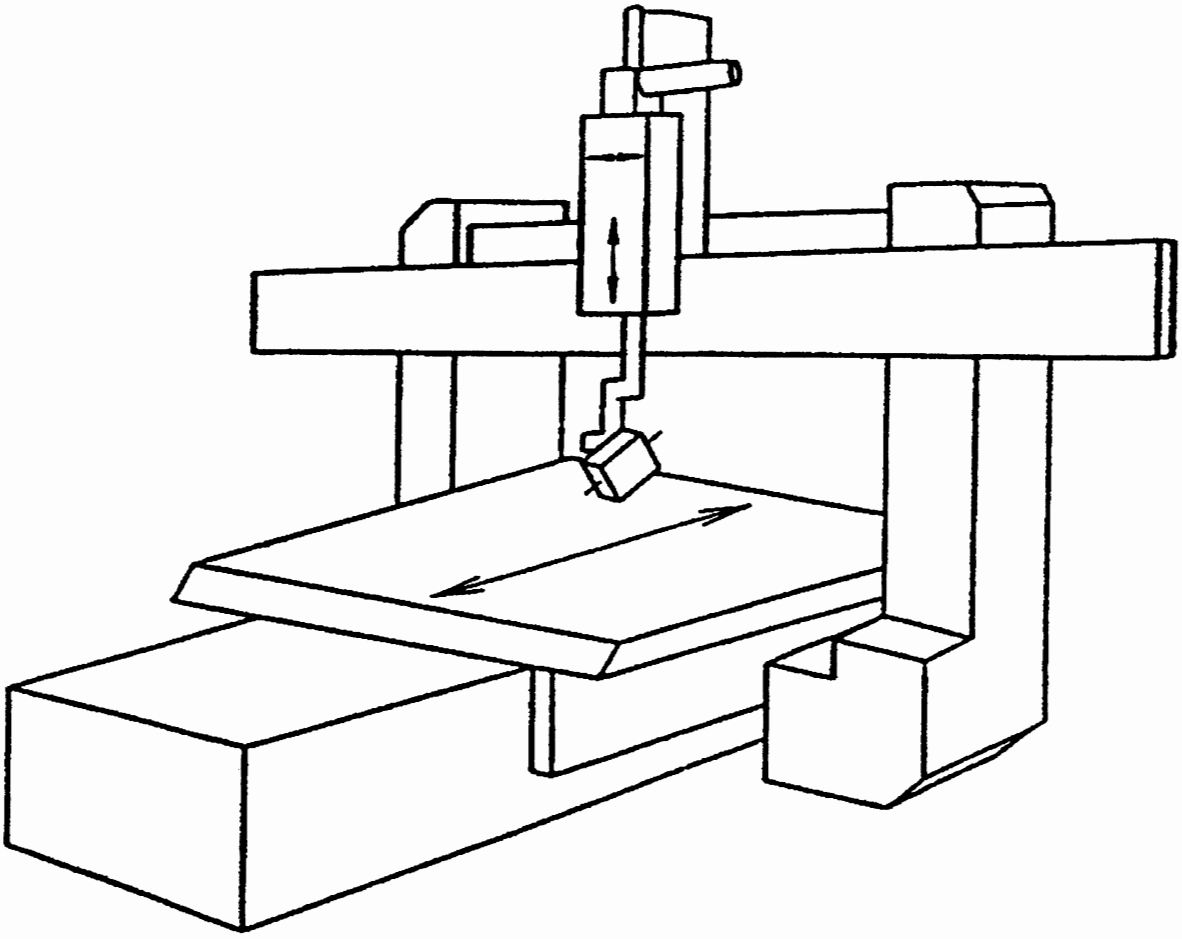

Figure 5 : Machining center (moving table, fixed portal, moving head) [1)]

1) Safeguarding devices are not illustrated

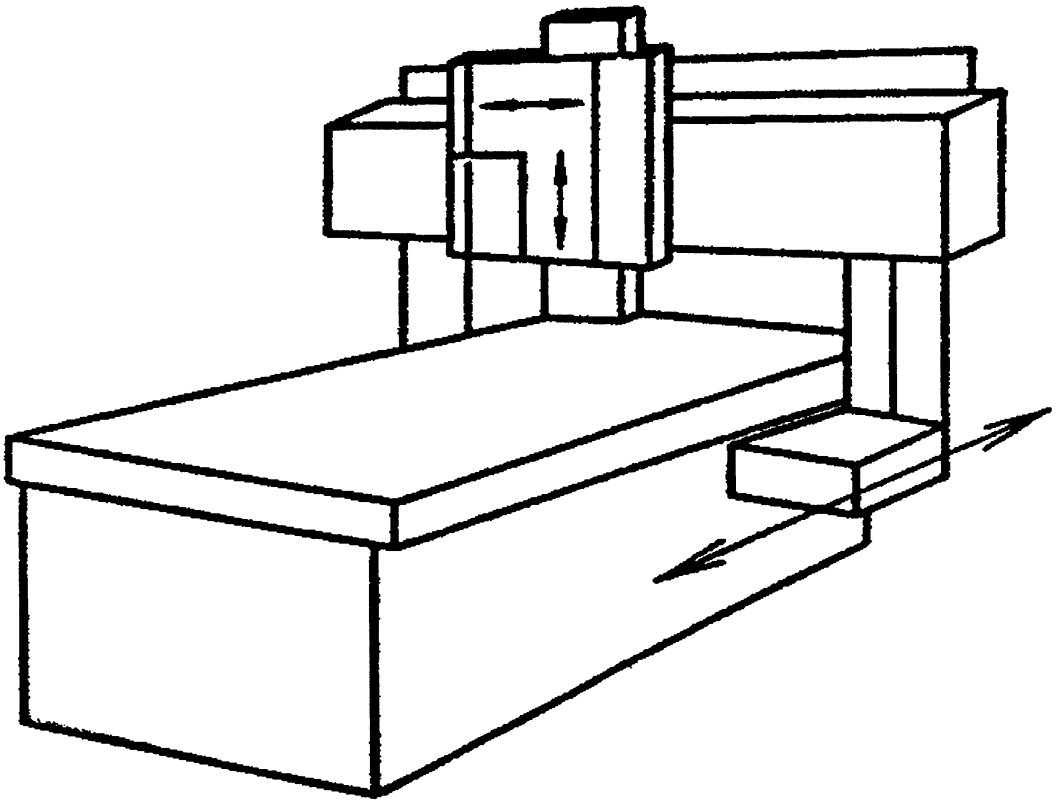

Figure 6 : Overhead router (fixed table, moving portal, moving head) [1)]

1) Safeguarding devices are not illustrated