INTERNATIONAL STANDARD

ISO 12584

First edition
2013-11-01

Aerospace — Hydraulic fluid components — Expression of particulate contamination levels

Aéronautique et espace — Composants pour fluides hydrauliques — Expression des niveaux de contamination particulaire

Reference number
ISO 12584:2013(E)

ISO copyright office
Case postale 56 • CH-1211 Geneva 20
Tel. + 41 22 749 01 11
Fax + 41 22 749 09 47
E-mail copyright@iso.org
Web www.iso.org

Published in Switzerland

Contents

Page

Foreword

ISO (the International Organization for Standardization) is a worldwide federation of national standards bodies (ISO member bodies). The work of preparing International Standards is normally carried out through ISO technical committees. Each member body interested in a subject for which a technical committee has been established has the right to be represented on that committee. International organizations, governmental and non-governmental, in liaison with ISO, also take part in the work. ISO collaborates closely with the International Electrotechnical Commission (IEC) on all matters of electrotechnical standardization.

The procedures used to develop this document and those intended for its further maintenance are described in the ISO/IEC Directives, Part 1. In particular the different approval criteria needed for the different types of ISO documents should be noted. This document was drafted in accordance with the editorial rules of the ISO/IEC Directives, Part 2. www.iso.org/directives

Attention is drawn to the possibility that some of the elements of this document may be the subject of patent rights. ISO shall not be held responsible for identifying any or all such patent rights. Details of any patent rights identified during the development of the document will be in the Introduction and/or on the ISO list of patent declarations received. www.iso.org/patents

Any trade name used in this document is information given for the convenience of users and does not constitute an endorsement.

The committee responsible for this document is ISO/TC 20, *Aircraft and space vehicles*, Subcommittee SC 10, *Aerospace fluid systems and components*.

Introduction

The reliability of fluid circuits depends largely on the quantity and size of the particles conveyed by the fluid.

The cleanliness of the operating fluid is obtained and maintained by filtration at a level consistent with the sensitivity of the system components to particulate contamination and the life and reliability required by the operator of the system.

The cleanliness of the system at start-up is dependent on the cleanliness of the components as delivered, the amount of contamination added during the build process, the cleanliness of the hydraulic liquid used to fill the system, and how successful the liquid was in penetrating the clearances. The amount of contamination added from these processes must be controlled to minimize the damage to the system during the initial running period. Cleanliness specifications are fundamental to this.

This International Standard defines the terminology used in and the method of reporting and communicating the cleanliness of components used in aerospace fluid systems. This will ensure consistent and unambiguous reporting.

It also presents a coding system which allows cleanliness data to be reported either in a shortened manner or in a complete manner for communication purposes or for specifying cleanliness requirements.

Aerospace — Hydraulic fluid components — Expression of particulate contamination levels

1 Scope

This International Standard defines the method of reporting and communicating the contamination (or cleanliness) level of components used in aerospace fluid systems.

It also presents a coding system which allows cleanliness data to be reported, both in a shortened manner and in a complete manner, when communicating for reporting contamination level measurement results and for specifying cleanliness requirements.

2 Normative references

The following documents, in whole or in part, are normatively referenced in this document and are indispensable for its application. For dated references, only the edition cited applies. For undated references, the latest edition of the referenced document (including any amendments) applies.

ISO 11171, *Hydraulic fluid power — Calibration of automatic particle counters for liquids*

ISO 18413, *Hydraulic fluid power — Cleanliness of parts and components — Inspection document and principles related to contaminant collection, analysis and data reporting*

3 Terms and definitions

For the purposes of this document, the following terms and definitions apply.

3.1
component
general term to cover a part, a subassembly, or a part assembly used on an aerospace fluid system

3.2
component cleanliness
condition of a component characterized by a level of particulate contamination

Note 1 to entry: Expression to be used preferably to set a specification.

3.3
component cleanliness code
CCC
alphanumeric expression of the particulate contamination level of a component or part for fluid circuits

3.4
particulate contamination
all undesirable particles which are in and on a component

Note 1 to entry: Expression to be used preferably to report measurements.

3.5
wetted surfaces
surface area of the component that is exposed to system liquid

EXAMPLE Hydraulic gear pump (see Figure 1).

Note 1 to entry: The wetted surface of a gear pump is the sum of the internal surfaces of the pump body (2 plates + 1 gear housing with 2 ports) and of the external surface of the two gear wheels. The example shown gives a simplified illustration and does not include all surfaces wetted by the hydraulic liquid.

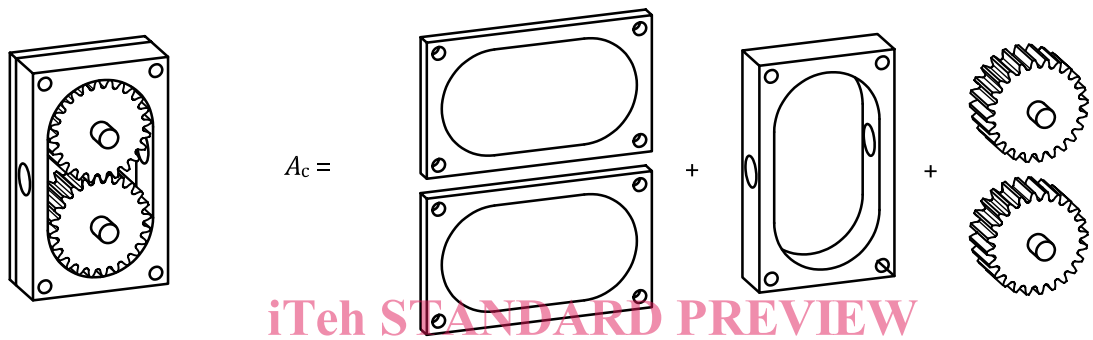

Figure 1 — Diagrammatic representation of the wetted surfaces of a hydraulic gear pump

3.6
wetted volume
V_c
volume of fluid contained in the component during normal operation

EXAMPLE Hydraulic gear pump (see Figure 2).

Note 1 to entry: The wetted volume of a gear pump is the volume of the gear housing minus the volume of the two gears. The example shown gives a simplified illustration and does not include all of the volumes filled with the hydraulic liquid.

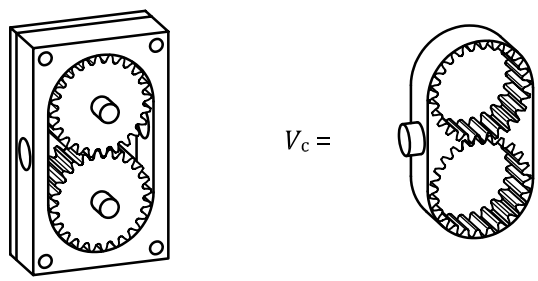

Figure 2 — Diagrammatic representation of the wetted volume of a hydraulic gear pump

4 Principle

The particulate contamination of a component is expressed by a level related to the number of particles in various size ranges and related to the wetted volume of the component. It is measured by counting particles after they have been extracted from the component by an appropriate extraction method (see ISO 18413).

5 Characteristics of the component

5.1 General

The fluid cleanliness code of ISO 11218 has served as a basis for the drawing up of the component cleanliness code. This fluid cleanliness code quantifies the number of particles of given sizes present in a given volume (100 cm^3) of fluid being analysed.

By definition, the contamination of a component is only present on its surfaces. Damage to components of the fluid circuit is caused only when particles detach from their surfaces and are transferred to the fluid in circulation. For this reason, the contamination of a component is quantified by the number of particles of given sizes present in a given volume of the component under analysis.

5.2 Determination of the wetted volume

5.2.1 Experimental method

5.2.1.1 Ensure that the interior of the component is dry.

5.2.1.2 Blank off all ports except one or more if necessary in order to allow a complete filling.

5.2.1.3 Prepare a volume of test fluid (V_1), known to within 1 %, of approximately 1,3 times the presumed wetted volume of the component. The test fluid shall be compatible with the materials of the component and shall have a viscosity below 5 mm^2/s at the test temperature.

NOTE It has proven to be practical to weigh this volume in its container, previously tarred, and to divide the mass of test fluid by its density.

5.2.1.4 Carefully fill the component with test fluid, avoiding the trapping of air. To achieve this, move the component gently in suitable directions so that all its parts are filled up. Add further test fluid as necessary.

5.2.1.5 Determine the volume (V_2) remaining in the container of 5.2.1.3.

5.2.1.6 Determine the volume (V_c) which has been required for the filling of the component:

$$V_c = V_1 - V_2$$

5.2.2 Method of calculation

If the computer's industrial drawing software possesses the function, calculate the wetted volume of the component.

5.2.3 Relationship between wetted surface area and wetted volume

Where a cleanliness specification or a cleanliness measurement result is expressed per unit surface area of the component, this value shall be calculated to the number of particles per unit volume of wetted volume of the component using Annex A.