SLOVENSKI STANDARD
SIST EN 201:2000

01-april-2000

Rubber and plastics machines - Injection moulding machines - Safety requirements

Rubber and plastics machines - Injection moulding machines - Safety requirements

Gummi- und Kunststoffmaschinen - Spritzgießmaschinen - Sicherheitsanforderungen

Machines pour le caoutchouc et les matieres plastiques - Machines a injecter - Prescriptions de sécurité

Ta slovenski standard je istoveten z: EN 201:1997

ICS:

83.200	Oprema za gumarsko industrijo in industrijo polimernih materialov	Equipment for the rubber and plastics industries

SIST EN 201:2000 **en**

EUROPEAN STANDARD

NORME EUROPÉENNE

EUROPÄISCHE NORM

EN 201

February 1997

ICS 83.200

Supersedes EN 201:1985

Descriptors: plastic moulding, rubber, injection machines, accident prevention, safety requirements, equipment specifications, design, dangerous areas, hazards, safety measures, safety devices, inspection, human factors engineering

English version

Rubber and plastics machines - Injection moulding machines - Safety requirements

Machines pour le caoutchouc et les matières plastiques - Machines à injecter - Prescriptions de sécurité

Gummi- und Kunststoffmaschinen - Spritzgießmaschinen - Sicherheitsanforderungen

This European Standard was approved by CEN on 1996-10-12. CEN members are bound to comply with the CEN/CENELEC Internal Regulations which stipulate the conditions for giving this European Standard the status of a national standard without any alteration.

Up-to-date lists and bibliographical references concerning such national standards may be obtained on application to the Central Secretariat or to any CEN member.

The European Standards exist in three official versions (English, French, German). A version in any other language made by translation under the responsibility of a CEN member into its own language and notified to the Central Secretariat has the same status as the official versions.

CEN members are the national standards bodies of Austria, Belgium, Denmark, Finland, France, Germany, Greece, Iceland, Ireland, Italy, Luxembourg, Netherlands, Norway, Portugal, Spain, Sweden, Switzerland and United Kingdom.

CEN

European Committee for Standardization
Comité Européen de Normalisation
Europäisches Komitee für Normung

Central Secretariat: rue de Stassart,36 B-1050 Brussels

CONTENTS **PAGE**

Foreword

This European Standard has been prepared by Technical Committee CEN/TC 145 "Rubber and plastics machines - Safety ", the secretariat of which is held by UNI.

This European Standard shall be given the status of a national standard, either by publication of an identical text or by endorsement, at the latest by August 1997, and conflicting national standards shall be withdrawn at the latest by August 1997.

This European Standard has been prepared under a mandate given to CEN by the European Commission and the European Free Trade Association, and supports essential requirements of EU Directive(s).

For relationship with EU Directive(s), see informative Annex ZA, which is an integral part of this standard.

In addition to the previous version of EN 201, requirements for carousel machines, shuttle and turntable machines, and multistation machines with mobile injection unit, are included. Furthermore safety requirements for the interaction between injection moulding machines and ancillary equipment are specified.

According to the CEN/CENELEC Internal Regulations, the national standards organizations of the following countries are bound to implement this European Standard: Austria, Belgium, Denmark, Finland, France, Germany, Greece, Iceland, Ireland, Italy, Luxembourg, Netherlands, Norway, Portugal, Spain, Sweden, Switzerland and the United Kingdom.

0 Introduction

This European standard is a type C standard as defined in EN 292-1:1991 and has been elaborated by CEN/TC145/WG1.

The extent to which hazards are covered is indicated in the scope of this standard. In addition, machinery shall comply, as appropriate, with EN 292 for hazards which are not covered by this standard.

1 Scope

This standard specifies the essential safety requirements for injection moulding machines for the processing of plastics and/or rubber. All hazards listed in clause 4 are covered by this standard.

The following machines are excluded:
- machines on which the clamping unit can only be operated by the physical force of the operator
- machines for reaction injection moulding (RIM, see prEN 1612-1 and prEN 1612-2)
- compression and transfer moulding machines (see EN 289)
- direct on sole injection moulding machines and full boot injection moulding machines (Wellington type boots with textile inserts) (see prEN 1845).

The safety requirements for the interaction between injection moulding machines and ancillary equipment are specified. The safety requirements for the ancillary equipment itself are not specified.

This standard does not cover requirements for the design of an exhaust system.

This standard applies to injection moulding machines manufactured after the date of issue of the standard.

2 Normative References

This standard incorporates by dated or undated reference, provisions from other publications. These normative references are cited at appropriate places in the text and the publications are listed hereafter. For dated references, subsequent amendments to or revisions of any of these publications apply to this European Standard only when incorporated in it by amendment or revision. For undated references the latest edition of the publication referred to applies.

EN 292-1:1991	Safety of Machinery - Basic concepts, general principles for design Part 1: Basic terminology, methodology
EN 292-2:1991/A1: 1995	Safety of Machinery - Basic concepts, general principles for design Part 2: Technical principles and specifications
EN 294:1992	Safety of Machinery - Safety distances to prevent dangerous zones being reached by the upper limbs
EN 418	Safety of Machinery - Emergency stop equipment, functional aspects. Principles for design
EN 563:1994	Safety of Machinery - Temperature of touchable surfaces Ergonomic data to establish limit values for hot surfaces
prEN 574:1995	Safety of Machinery - Two-hand control devices, functional aspects. Principles for design
prEN 953:1992	Safety of Machinery - General requirements for the design and construction of guards (fixed, movable)
prEN 982:1992	Safety requirements for fluid power systems and components; Hydraulics
prEN 983:1992	Safety requirements for fluid power systems and components; Pneumatics
EN 1088:1995	Safety of Machinery - Interlocking devices associated with guards. Principles for design and selection

prEN 1760-1:1994	Safety of Machinery - Pressure sensitive protective devices. Part 1: General principles for the design and testing of pressure sensing mats and pressure sensing floors
EN 10025:1993	Hot rolled products of non-alloy structural steels Technical delivery conditions
EN 20286-1:1993	ISO System of limits and fits Part 1: Bases of tolerances, deviations and fits
EN 23741:1991	Acoustics; Determination of sound power levels of noise sources; Precision methods for broad-band sources in reverberation rooms
EN 23742:1991	Acoustics; Determination of sound power levels of noise sources; Precision methods for discrete-frequency and narrow-band sources in reverberation rooms
prEN 50100-1:1994	Safety of Machinery - Electro-sensitive protective equipment Part 1: General requirements and tests
EN 60204-1:1992	Safety of Machinery - Electrical equipment of machines Part 1: General requirements
EN 61131-1:1994	Programmable controllers. Part 1: General information
EN ISO 3743-1:1995	Acoustics - Determination of sound power levels of noise sources - Engineering methods for small, movable sources in reverberant fields - Part 1: Comparison method for hard-walled test rooms
prEN ISO 3743-2:1995	Acoustics - Determination of sound power levels of noise sources using sound pressure - Engineering methods for small movable sources in reverberant fields - Part 2: Methods for special reverberation test rooms
EN ISO 3744:1995	Acoustics; Determination of sound power levels of noise sources; Engineering methods for free-field conditions over a reflecting plane
EN ISO 3746:1995	Acoustics; Determination of sound power levels of noise sources using sound pressure; Survey method employing an enveloping measurement surface over a reflecting plane
EN ISO 9614-1:1995	Acoustics; Determination of sound power levels of noise sources using sound intensity Part 1: Measurement at discrete points
EN ISO 11201: 1995	Acoustics; Noise emitted by machinery and equipment; Measurement of emission sound pressure levels at the workstation and at other specified positions; Engineering method in an essentially free field over a reflecting plane

EN ISO 11202:1995	Acoustics; Noise emitted by machinery and equipment; Measurement of emission sound pressure levels at the workstation and at other specified positions; Survey method in situ
EN ISO 11203:1995	Acoustics; Noise emitted by machinery and equipment; Determination of emission sound pressure levels at the workstation and at other specified positions.
EN ISO 11204:1995	Acoustics; Noise emitted by machinery and equipment; Measurement of emission sound pressure levels at the workstation and other specified positions; Method requiring environmental corrections
ISO 3745:1977	Acoustics; Determination of sound power levels of noise sources; Precision methods for anechoic and semi-anechoic rooms
ISO 3747:1987	Acoustics; Determination of sound power levels of noise sources; Survey method using a reference sound source
ISO/DIS 9614-2:1994	Acoustics; Determination of sound power levels of noise sources using sound intensity Part 2: Measurement by scanning

3 Definitions

For the purpose of this standard the following definitions apply:

3.1 Injection moulding machine

A machine for the discontinuous production of moulded parts from thermo-plastics, thermo-setting plastics, thermo-plastic rubber or rubber compounds. The plasticised material is injected through a nozzle into a mould containing a cavity in which the article is formed.

NOTE: If the plasticised material is not injected through a nozzle into the mould then see EN 289.

An injection moulding machine essentially consists of one or more clamping units, one or more plasticising and/or injection units, drive and control systems.

3.2 Mould area

The area between the platens.

3.3 Clamping mechanism

A mechanism attached to the mobile platen to move that platen and to apply the clamping force.

3.4 Plasticising and/or injection unit

A unit for plasticising and subsequently injecting material through a nozzle.

3.5 carousel machine

A machine consisting of two or more clamping units mounted on a carousel in either a vertical or horizontal configuration to index to one or more fixed plasticising and/or injection units (see figure 1).

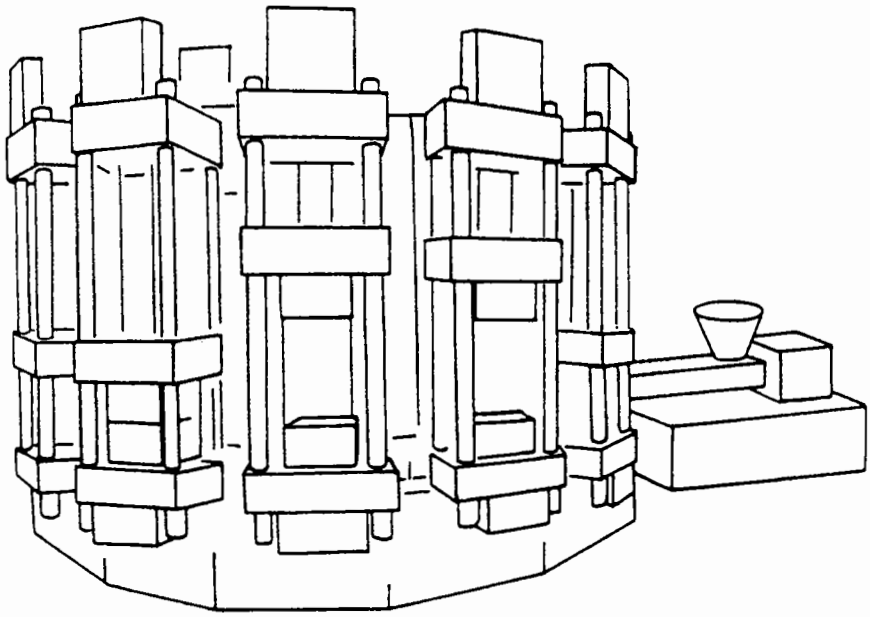

Figure 1a: Example of a carousel machine shown without guards

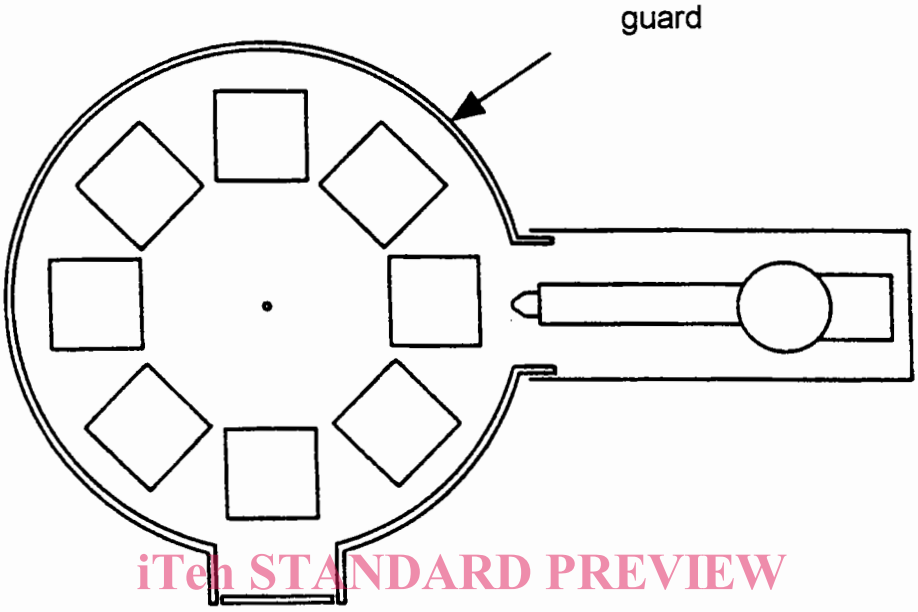

Figure 1b: Example of a carousel machine shown with guards (plan view)

Figure 1 : Example of a carousel machine

3.6 shuttle/turntable machine

A machine designed to contain one or more lower parts of moulds attached to a table. The table indexes the lower parts of the mould by a sliding or rotary motion between the loading/unloading station and the injection position (see figures 2 and 3).

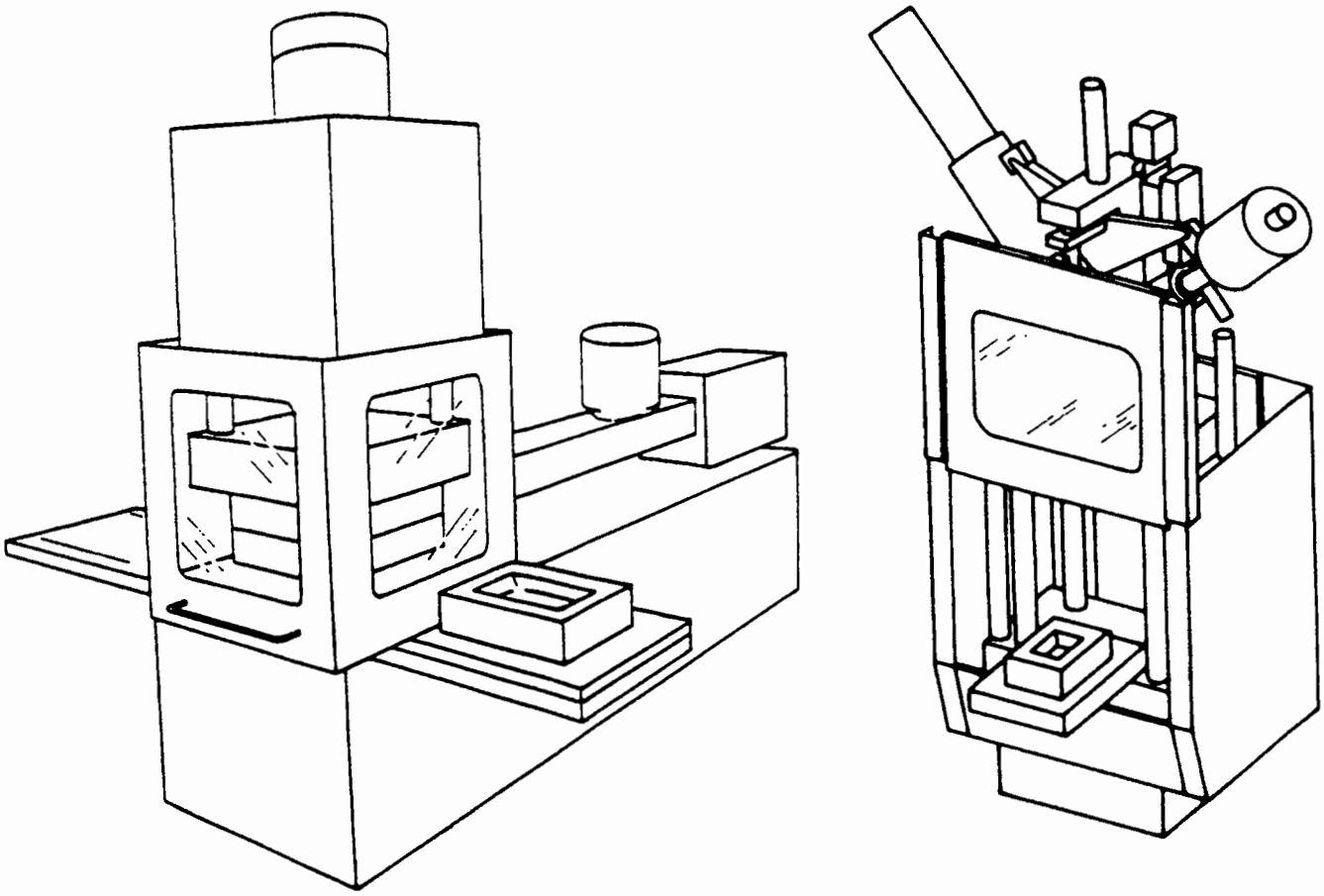

Figure 2: Examples of shuttle table machines shown without guards for the movements of the table

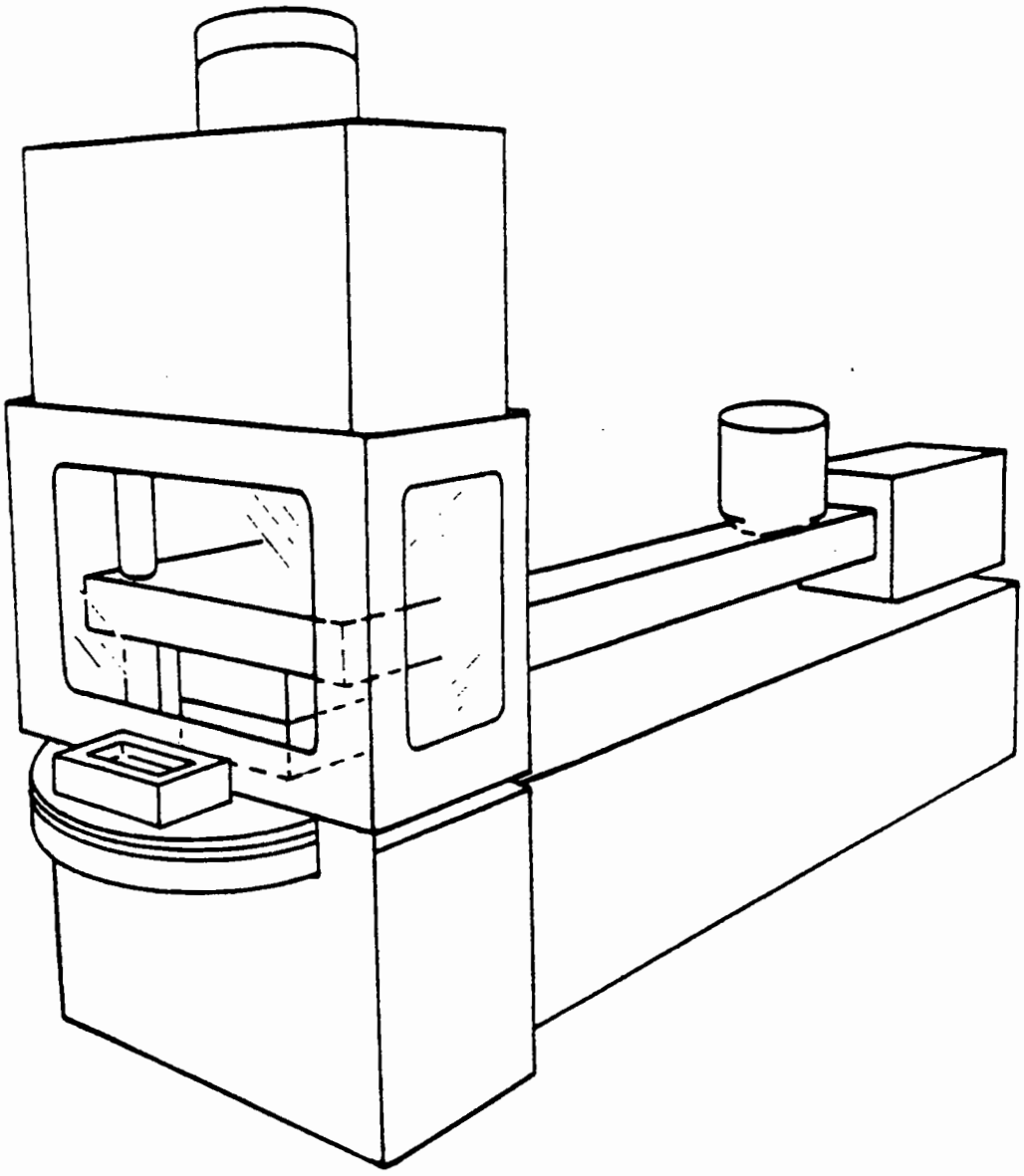

Figure 3: Example of a turntable machine shown without guards for the movements of the table

3.7 Multistation machine with mobile injection unit

A machine consisting of a mobile plasticising and/or injection unit which indexes between two or more stationary clamping units (see figure 4).

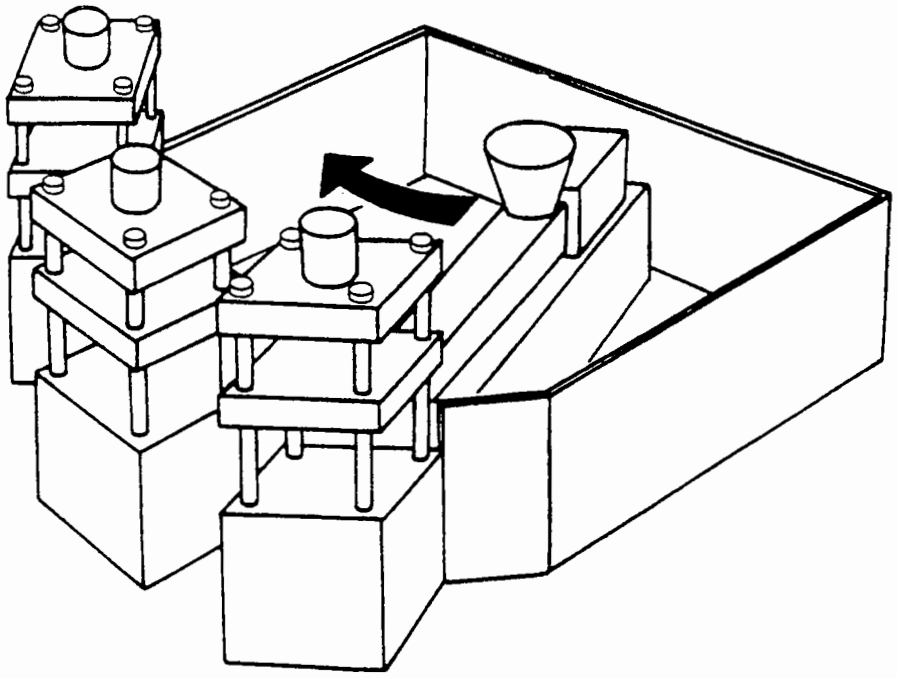

Figure 4a: Example of multistation machine with mobile plasticising and injection unit, shown without guards for the clamping units

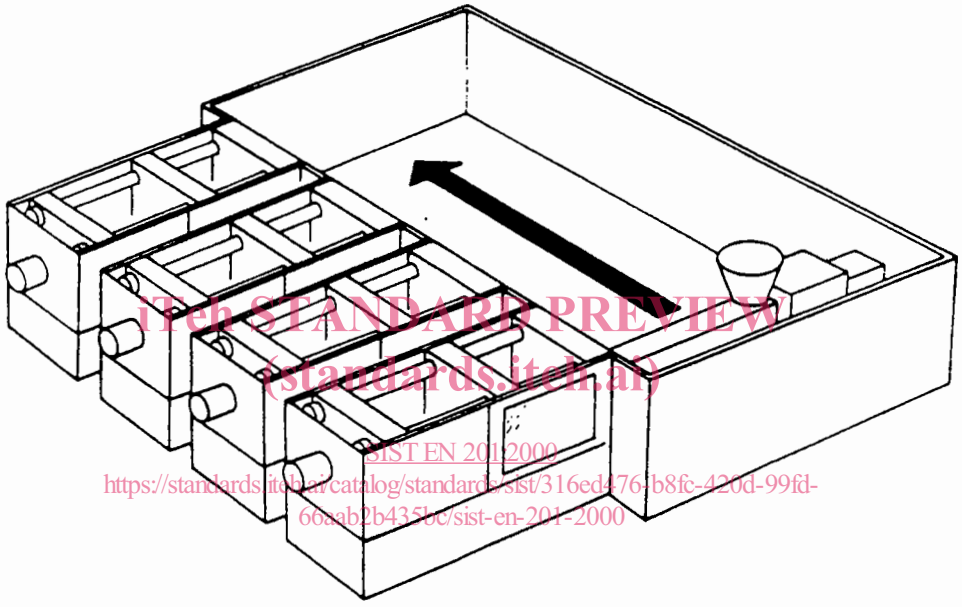

Figure 4b: Example of multistation machine with mobile plasticising and injection unit shown with guards for the clamping units

Figure 4 : Examples of multistation machines with mobile plasticising and injection units

3.8 Ancillary equipment

Equipment which interacts with the injection moulding machine, e.g. pick and place device, robot, mould changing equipment, mould clamping device or a conveyor.

4 List of hazards

This clause lists the significant hazards associated with injection moulding machines. This standard differentiates between:

- general hazards
- additional hazards associated with specific machine areas
- additional hazards associated with specific design
- additional hazards associated with the interaction between the injection moulding machine and ancillary equipment.

4.1 General hazards

4.1.1 Mechanical hazards

4.1.1.1 Crushing and/or shearing and/or impact hazards caused by:

- movements of power operated movable guards
- whiplash of flexible hoses with pressures higher than 5 MPa.

4.1.1.2 Hazards due to release of fluids under pressure

Injuries to the eyes or skin due to unintended release of fluids under pressure from hydraulic or pneumatic systems, or heat conditioning system, in particular from flexible hoses and their connections with pressures higher than 5 MPa.

4.1.2 Electrical hazards

Electric shock or burns due to direct or indirect contact with live conductive parts.

4.1.3 Thermal hazards

Burns and/or scalds due to operating temperatures of:

- hoses of the heat conditioning system and their fittings
- escaping fluids from the heat conditioning system.

4.1.4 Hazards generated by noise

Hearing impairment caused by noise. The main noise sources are:

- the hydraulic system especially during injection
- the pneumatic system e.g. exhaust of gases.

4.1.5 Hazards generated by gases, vapours and dusts

Hazards resulting from contact with or inhalation of gases, vapours and dusts harmful to health:

- during plasticising of the material and subsequent injection into the mould or purging
- during curing or vulcanising of the article in the mould
- after the mould is open.

4.1.6 Slip, trip and fall hazards

Injury caused by slipping, tripping and falling from designated access positions above the reference plane.

4.2 Additional hazards associated with specific machine areas

The principal danger areas are shown in figures 5 and 6:

1 mould area
2 clamping mechanism area
3 area of movement of core and ejector drive mechanisms outside areas 1 & 2
4 nozzle area
5 plasticising and/or injection unit area
5.1 feed aperture area
5.2 area of the heater bands of the plasticising and/or injection cylinders
6 discharge area

4.2.1 Mould area

4.2.1.1 Mechanical hazards

Crushing and/or shearing and/or impact hazards caused by:

- closing movement of the platen
- movements of the injection cylinders through the registers of the fixed platen
- movements of cores and ejectors and their drive mechanisms