INTERNATIONAL STANDARD

ISO 13795

First edition
2012-07-01

Ships and marine technology — Ship's mooring and towing fittings — Welded steel bollards for sea-going vessels

Navires et technologie maritime — Corps-morts et ferrures de remorquage de navires — Bittes d'amarrage en acier soudées pour navires de haute mer

iTeh STANDARD PREVIEW
(standards.iteh.ai)

ISO 13795:2012
https://standards.iteh.ai/catalog/standards/sist/d690642f-9dea-42e7-b629-561c32ed60d5/iso-13795-2012

Reference number
ISO 13795:2012(E)

© ISO 2012

iTeh STANDARD PREVIEW
(standards.iteh.ai)

ISO 13795:2012
https://standards.iteh.ai/catalog/standards/sist/d690642f-9dea-42e7-b629-561c32ed60d5/iso-13795-2012

COPYRIGHT PROTECTED DOCUMENT

© ISO 2012

All rights reserved. Unless otherwise specified, no part of this publication may be reproduced or utilized in any form or by any means, electronic or mechanical, including photocopying and microfilm, without permission in writing from either ISO at the address below or ISO's member body in the country of the requester.

ISO copyright office
Case postale 56 • CH-1211 Geneva 20
Tel. + 41 22 749 01 11
Fax + 41 22 749 09 47
E-mail copyright@iso.org
Web www.iso.org

Published in Switzerland

 © ISO 2012 – All rights reserved

Contents

Page

Foreword iv
Introduction v
1 Scope 1
2 Normative references 1
3 Terms and definitions 1
4 Classification 1
4.1 Type 1
4.2 Nominal sizes 1
5 Dimensions 1
6 Materials 2
7 Construction 2
8 Manufacturing and inspection 2
9 Marking 2
Annex A (informative) **Basis for strength assessment of welded steel bollards** 9
Bibliography 12

iTeh STANDARD PREVIEW
(standards.iteh.ai)

ISO 13795:2012
https://standards.iteh.ai/catalog/standards/sist/d690642f-9dea-42e7-b629-561c32ed60d5/iso-13795-2012

© ISO 2012 – All rights reserved

Foreword

ISO (the International Organization for Standardization) is a worldwide federation of national standards bodies (ISO member bodies). The work of preparing International Standards is normally carried out through ISO technical committees. Each member body interested in a subject for which a technical committee has been established has the right to be represented on that committee. International organizations, governmental and non-governmental, in liaison with ISO, also take part in the work. ISO collaborates closely with the International Electrotechnical Commission (IEC) on all matters of electrotechnical standardization.

International Standards are drafted in accordance with the rules given in the ISO/IEC Directives, Part 2.

The main task of technical committees is to prepare International Standards. Draft International Standards adopted by the technical committees are circulated to the member bodies for voting. Publication as an International Standard requires approval by at least 75 % of the member bodies casting a vote.

Attention is drawn to the possibility that some of the elements of this document may be the subject of patent rights. ISO shall not be held responsible for identifying any or all such patent rights.

ISO 13795 was prepared by Technical Committee ISO/TC 8, *Ships and marine technology*, Subcommittee SC 4, *Outfitting and deck machinery*.

iTeh STANDARD PREVIEW
(standards.iteh.ai)

ISO 13795:2012
https://standards.iteh.ai/catalog/standards/sist/d690642f-9dea-42e7-b629-561c32ed60d5/iso-13795-2012

 © ISO 2012 – All rights reserved

Introduction

A bollard is a type of ship's mooring and towing fitting installed on board to belay the mooring and towing rope.

iTeh STANDARD PREVIEW
(standards.iteh.ai)

ISO 13795:2012
https://standards.iteh.ai/catalog/standards/sist/d690642f-9dea-42e7-b629-561c32ed60d5/iso-13795-2012

© ISO 2012 – All rights reserved

iTeh STANDARD PREVIEW
(standards.iteh.ai)

ISO 13795:2012
https://standards.iteh.ai/catalog/standards/sist/d690642f-9dea-42e7-b629-561c32ed60d5/iso-13795-2012

Ships and marine technology — Ship's mooring and towing fittings — Welded steel bollards for sea-going vessels

1 Scope

This International Standard specifies the design, size and technical requirements for welded steel bollards suitable for installation on sea-going vessels to meet normal mooring and towing requirements.

2 Normative references

The following referenced documents are indispensable for the application of this document. For dated references, only the edition cited applies. For undated references, the latest edition of the referenced document (including any amendments) applies.

IMO Circular MSC/Circ.1175, *Guidance on shipboard towing and mooring equipment*

3 Terms and definitions

For the purposes of this document, the following terms and definitions apply.

iTeh STANDARD PREVIEW
(standards.iteh.ai)

3.1
safe working load
SWL
maximum load in kN on the rope that should normally be applied in service conditions

ISO 13795:2012
https://standards.iteh.ai/catalog/standards/sist/d690642f-9dea-42e7-b629-561c32ed60d5/iso-13795-2012

3.2
TOW
maximum load on the rope applied to a bollard subjected to tug boat pull by using an eye splice at the end of the towing rope to connect to the bollard

4 Classification

4.1 Type

Depending on the construction, welded steel bollards shall be classified as the following two types:

— Type A – with compact base plate;

— Type B – with wide base plate.

4.2 Nominal sizes

The nominal sizes, D_n, of bollards are denoted by reference to the outside diameter of the post, in millimetres, in terms of the nearest number drawn from a basic series of preferred numbers. For the bollards having the same post diameter, the nominal size is followed by an alphabetical character for the different SWL.

The nominal sizes are: 150, 200, 250A, 250B, 300A, 300B, 350A, 350B, 400A, 400B, 450A, 450B, 500A, 500B, 550A, 550B and 600.

5 Dimensions

Bollards have dimensions and particulars in accordance with Tables 1 and 2, and Figures 1 and 2.

© ISO 2012 – All rights reserved

6 Materials

The materials of the following components shall be used for manufacturing the bollards:

— Plates: weldable steel plates having a yield point of not less than 235 N/mm^2.

— Post tubes: weldable steel plates having a yield point of not less than 235 N/mm^2 or equivalent steel tubes.

7 Construction

7.1 The posts of the bollards shall be constructed from steel tubes or formed from plate.

7.2 The fins shall be installed to keep the ropes as low as possible so as to reduce the loads to the bollard posts from the mooring/towing ropes.

7.3 The eye plate for tying the stopping-off rope or chain shall be provided.

8 Manufacturing and inspection

8.1 All surfaces of the bollards including welding shall be free from any visible flaws or imperfections.

8.2 All surfaces in contact with the ropes shall be free from surface roughness or irregularities likely to cause damage to the ropes by abrasion.

iTeh STANDARD PREVIEW
(standards.iteh.ai)

8.3 The bollards shall be coated externally with an anti-corrosion protective finish.

ISO 13795:2012
https://standards.iteh.ai/catalog/standards/sist/dc900421-9dea-42c7-b629-561c32ed60d5/iso-13795-2012

8.4 A low-friction surface coating is not recommended so as to increase the holding force of the mooring ropes under figure-of-eight belay.

9 Marking

9.1 The safe working load (SWL) intended for the use of the bollards shall be noted in the towing and mooring plan available on board for the guidance of the shipmaster as specified in MSC/Circ.1175.

9.2 The actual SWL on board shall be determined by considering the under deck reinforcement, and it shall be marked on the towing and mooring plan. The actual SWL shall not be over the SWL indicated in this International Standard.

9.3 The bollards shall be clearly marked with their SWL by weld bead or equivalent. The SWL shall be expressed in tonnes (letter ‘t’) and be placed so that it is not obscured during operation of the fitting.

9.4 In case the bollard is used both for mooring and towing, the marking shall be provided as below:

Both SWLs for mooring and towing purposes shall be marked.

EXAMPLE 1 SWL XXX t

EXAMPLE 2 TOW XXX t

© ISO 2012 – All rights reserved

Dimensions in millimetres

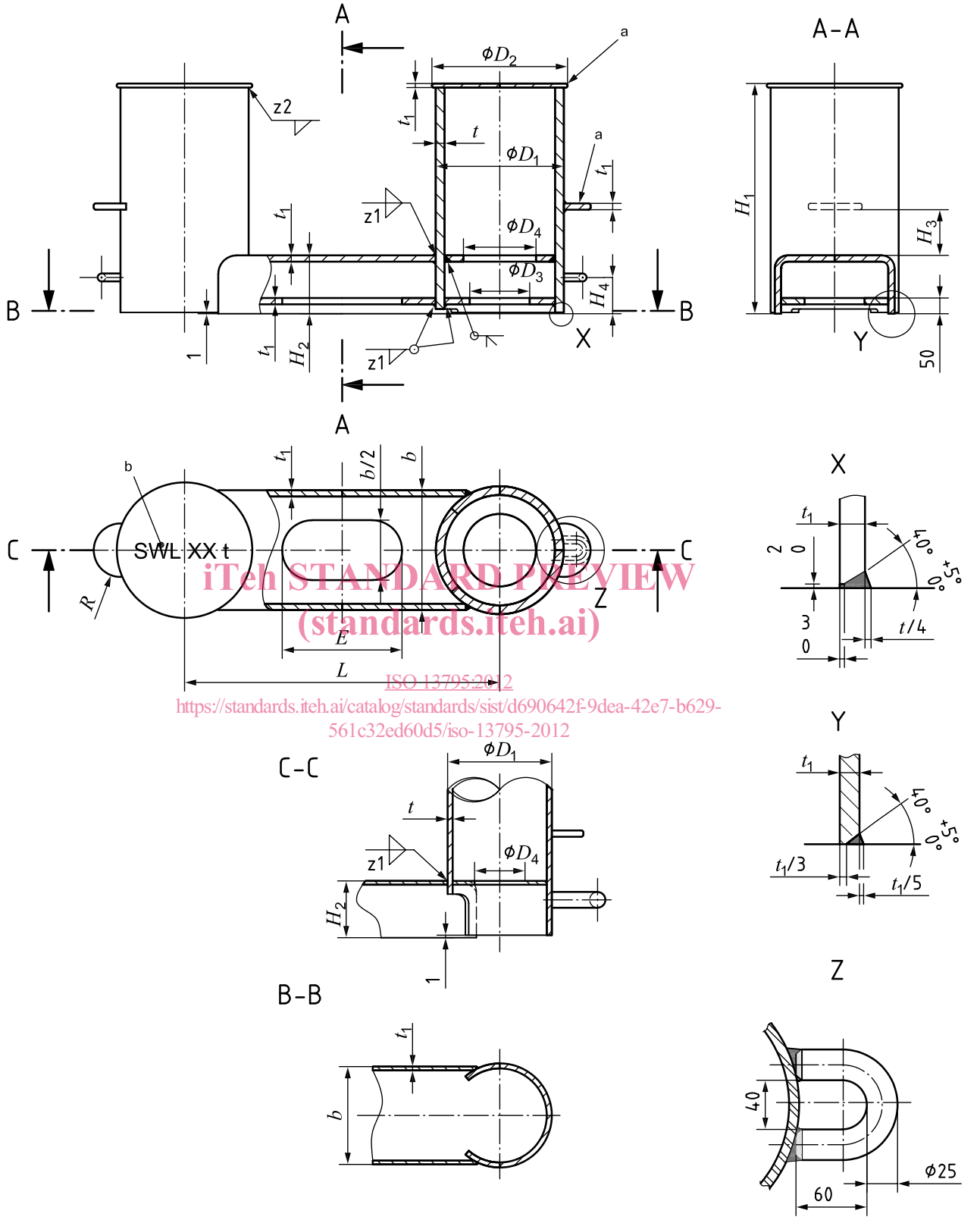

iTeh STANDARD PREVIEW
(standards.iteh.ai)
ISO 13795:2012
https://standards.iteh.ai/catalog/standards/sist/d690642f-9dea-42e7-b629-561c32ed60d5/iso-13795-2012

Key

a Edges smooth grinding.

b SWL marking.

Figure 1 — Type A (for nominal sizes 150, 200, 250A and 250B)

© ISO 2012 – All rights reserved

Table 1 — Dimensions and SWL for Type A bollards

Dimensions in millimetres

Nominal size D_n	D_1	D_2	D_3	D_4	H_1	H_2	H_3	H_4	b	L	E	t	t_1	t_2	R
150	165,2	185	-	80	330	90	70	60	155	400	-	8,0	6	6	40
200	216,3	240	-	130	395	115	70	60	205	500	-	8,0	6	6	50
250A	267,4	290	-	160	505	135	90	75	250	630	-	12,0	9	8	60
250B	267,4	290	-	160	505	135	90	75	250	630	-	10,0	8	7	60
300A	318,5	340	150	185	600	150	110	85	290	800	300	21,5	16	9	70
300B	318,5	340	150	185	600	150	110	85	290	800	300	12,0	9	9	70
350A	355,6	380	170	200	685	175	130	105	340	890	350	26,0	19	11	80
350B	355,6	380	170	220	685	175	130	105	340	890	350	14,0	10	9	80
400A	406,4	430	190	230	730	185	145	115	380	1 000	380	28,0	20	13	85
400B	406,4	430	190	250	730	185	145	115	380	1 000	380	15,0	11	11	85
450A	457,2	480	210	265	770	195	160	120	425	1 100	410	29,0	21	14	90
450B	457,2	480	210	285	770	195	160	120	425	1 100	410	14,5	11	11	90
500A	508,0	530	235	295	830	230	200	150	480	1 250	460	32,0	23	16	100
500B	508,0	530	235	320	830	230	200	150	480	1 250	460	14,5	11	11	100
550A	558,8	580	255	330	900	270	200	180	520	1 380	540	31,0	22	16	110
550B	558,8	580	255	350	900	270	200	180	520	1 380	540	21,0	16	11	110
600	609,4	630	280	365	950	300	200	200	560	1 550	600	33,0	23	16	120

iTeh STANDARD PREVIEW
(standards.iteh.ai)
ISO 13795:2012
https://standards.iteh.ai/catalog/standards/sist/d690642f-9dea-42e7-b629-561c32ed60d5/iso-13795-2012

© ISO 2012 – All rights reserved

Table 1 (*continued*)

Dimensions in millimetres

Nominal size D_n	Welding leg length[a]		SWL[b]						Calculated weight[c] (kg)
			For mooring purposes (Figure-of-eight belay)				For towing purposes (Eye splice)		
			One-rope use		Two-rope use				
	z_1	z_2	(kN)	(t)	(kN)	(t)	(kN)	(t)	
150	3,5	3,5	54	5,5	49	5,0	383	10	29
200	3,5	3,5	82	8,4	65	6,7	579	13	46
250A	5,5	4	156	16	134	14	1 315	27	107
250B	5,5	4	127	13	108	11	215	22	91
300A	10,5	4	332	34	306	31	3 365	62	281
300B	10,5	4	186	19	161	16	352	36	166
350A	12,5	5	443	45	418	43	5 062	85	431
350B	7	4	244	25	216	22	2 855	50	241
400A	12,5	6	594	61	521	53	6 632	106	570
400B	8	5	326	33	269	27	3 816	67	322
450A	12	7	753	77	612	62	8 201	124	712
450B	8	7	382	39	292	30	4 483	78	379
500A	12,5	8	992	101	757	77	10 928	154	960
500B	8	5	457	47	326	33	5 474	93	465
550A	11,5	8	1 131	115	812	83	12 635	165	1 123
550B	11,5	5	781	80	541	55	9 280	159	787
600	11,5	8	1 401	143	948	97	15 539	193	1 391

a Welding with chamfering is available based on the same welding volume/strength.

b The SWL is the maximum applicable rope tension.

The SWLs shown in this table are for reference only. These are based on the loadings as mentioned in Annex A.

c The calculated weight is for reference only.

iTeh STANDARD PREVIEW
(standards.iteh.ai)
ISO 13795:2012
https://standards.iteh.ai/catalog/standards/sist/d690642f-9dca-42c7-b629-561c32ed60d5/iso-13795-2012

© ISO 2012 – All rights reserved