INTERNATIONAL STANDARD

ISO 2538-1

First edition
2014-09-01

Geometrical product specifications (GPS) — Wedges —

Part 1: Series of angles and slopes

Spécification géométrique des produits (GPS) — Coins —

Partie 1: Séries d'angles et d'inclinaisons

iTeh STANDARD PREVIEW
(standards.iteh.ai)
ISO 2538-1:2014
https://standards.iteh.ai/catalog/standards/sist/fb984fd1-3576-4c58-b22b-05315252c4c2/iso-2538-1-2014

Reference number
ISO 2538-1:2014(E)

© ISO 2014

iTeh STANDARD PREVIEW
(standards.iteh.ai)

ISO 2538-1:2014
https://standards.iteh.ai/catalog/standards/sist/fb984fd1-3576-4c58-b22b-05315252c4c2/iso-2538-1-2014

COPYRIGHT PROTECTED DOCUMENT

© ISO 2014

All rights reserved. Unless otherwise specified, no part of this publication may be reproduced or utilized otherwise in any form or by any means, electronic or mechanical, including photocopying, or posting on the internet or an intranet, without prior written permission. Permission can be requested from either ISO at the address below or ISO's member body in the country of the requester.

ISO copyright office
Case postale 56 • CH-1211 Geneva 20
Tel. + 41 22 749 01 11
Fax + 41 22 749 09 47
E-mail copyright@iso.org
Web www.iso.org

Published in Switzerland

© ISO 2014 – All rights reserved

Contents

Page

Foreword ..... **iv**
Introduction ..... **v**
1 Scope **1**
2 Terms and definitions **1**
3 Values **4**
Annex A (informative) **Relation to the GPS matrix model** **6**
Bibliography **8**

iTeh STANDARD PREVIEW
(standards.iteh.ai)
ISO 2538-1:2014
https://standards.iteh.ai/catalog/standards/sist/fb984fd1-3576-4c58-b22b-05315252c4c2/iso-2538-1-2014

© ISO 2014 – All rights reserved

Foreword

ISO (the International Organization for Standardization) is a worldwide federation of national standards bodies (ISO member bodies). The work of preparing International Standards is normally carried out through ISO technical committees. Each member body interested in a subject for which a technical committee has been established has the right to be represented on that committee. International organizations, governmental and non-governmental, in liaison with ISO, also take part in the work. ISO collaborates closely with the International Electrotechnical Commission (IEC) on all matters of electrotechnical standardization.

The procedures used to develop this document and those intended for its further maintenance are described in the ISO/IEC Directives, Part 1. In particular the different approval criteria needed for the different types of ISO documents should be noted. This document was drafted in accordance with the editorial rules of the ISO/IEC Directives, Part 2 (see www.iso.org/directives).

Attention is drawn to the possibility that some of the elements of this document may be the subject of patent rights. ISO shall not be held responsible for identifying any or all such patent rights. Details of any patent rights identified during the development of the document will be in the Introduction and/or on the ISO list of patent declarations received (see www.iso.org/patents).

Any trade name used in this document is information given for the convenience of users and does not constitute an endorsement.

For an explanation on the meaning of ISO specific terms and expressions related to conformity assessment, as well as information about ISO's adherence to the WTO principles in the Technical Barriers to Trade (TBT) see the following URL: Foreword - Supplementary information

iTeh STANDARD PREVIEW
(standards.iteh.ai)

The committee responsible for this document is ISO/TC 213, *Dimensional and geometrical product specifications and verification*.

ISO 2538-1:2014
https://standards.iteh.ai/catalog/standards/sist/fb98dfd1-3576-4158-b228-05315252c4c2/iso-2538-1-2014

This first edition of ISO 2538-1, together with ISO 2538-2, cancels and replaces ISO 2538:1998, which has been technically revised.

ISO 2538 consists of the following parts, under the general title *Geometrical product specifications (GPS) — Wedges*:

— *Part 1: Series of angles and slopes*

— *Part 2: Dimensioning and tolerancing*

 © ISO 2014 – All rights reserved

Introduction

This part of ISO 2538 is a geometrical product specification (GPS) standard and is to be regarded as a general GPS standard (see ISO/TR 14638). It influences chain links 1 and 2 of the chain of standards on angle in the GPS matrix.

The ISO/GPS Masterplan given in ISO/TR 14638 gives an overview of the ISO/GPS system of which this document is a part. The fundamental rules of ISO/GPS given in ISO 8015 apply to this document and the default decision rules given in ISO 14253-1 apply to specifications made in accordance with this document, unless otherwise indicated.

For more detailed information on the relation of this part of ISO 2538 to other standards and to the GPS matrix model, see Annex A.

iTeh STANDARD PREVIEW
(standards.iteh.ai)
ISO 2538-1:2014
https://standards.iteh.ai/catalog/standards/sist/fb984fd1-3576-4c58-b22b-05315252c4c2/iso-2538-1-2014

© ISO 2014 – All rights reserved

iTeh STANDARD PREVIEW
(standards.iteh.ai)

ISO 2538-1:2014
https://standards.iteh.ai/catalog/standards/sist/fb984fd1-3576-4c58-b22b-05315252c4c2/iso-2538-1-2014

Geometrical product specifications (GPS) — Wedges —

Part 1: Series of angles and slopes

1 Scope

This International Standard specifies terms and definitions for wedges, three series of wedge angles from 120° to 0° 30′ and a series of wedge slopes from 1:10 to 1:500, for general mechanical engineering purposes.

2 Terms and definitions

For the purposes of this document, the following definitions apply.

2.1
wedge
pair of intersecting planes

iTeh STANDARD PREVIEW

Note 1 to entry: A wedge is a feature of size defined by an angular size.

(standards.iteh.ai)

Note 2 to entry: See Figure 1.

ISO 2538-1:2014
https://standards.iteh.ai/catalog/standards/sist/fb984fd1-3576-4c58-b22b-05315252c4c2/iso-2538-1-2014

2.2
wedge angle
β
angular size of the wedge defined in a plane perpendicular to the wedge edge

Note 1 to entry: See Figure 1.

2.3
wedge slope
S
ratio of the difference between the heights H and h in two determined cross-sections to the signed distance L between these cross-sections

$$S = (H - h) / L = \tan\beta$$

Note 1 to entry: L is positive for angles < 90° and negative for angles > 90°.

2.4
rate of wedge
C
2 × the tangent of half the wedge angle

$$C = 2\tan\frac{\beta}{2}$$

2.5
wedge edge
straight line established by the intersection of the wedge planes

Note 1 to entry: See Figure 1.

© ISO 2014 – All rights reserved

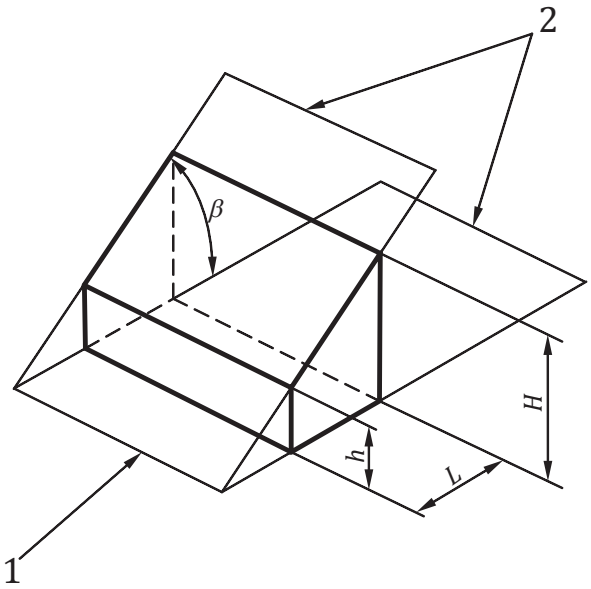

a) Angles smaller than 90 degrees

iTeh STANDARD PREVIEW
(standards.iteh.ai)

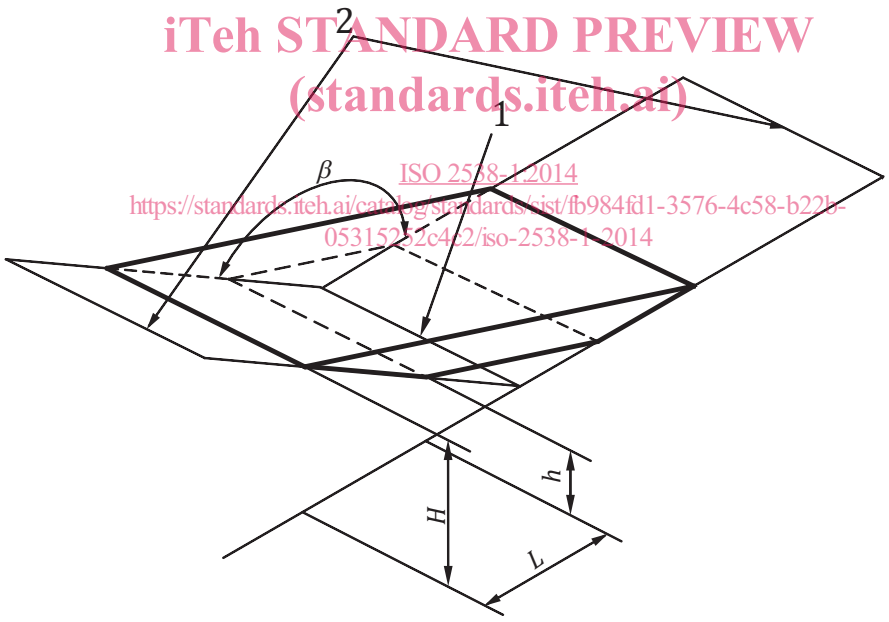

ISO 2538-1:2014
https://standards.iteh.ai/catalog/standards/sist/fb984fd1-3576-4c58-b22b-05315252c4c2/iso-2538-1-2014

b) Angles larger than 90 degrees

Key

1 wedge edge

2 wedge planes

Figure 1 — Wedges

2.6
vee-block
dove-tail
typical wedge with a large angle

Note 1 to entry: See Figures 2 and 3.

© ISO 2014 – All rights reserved

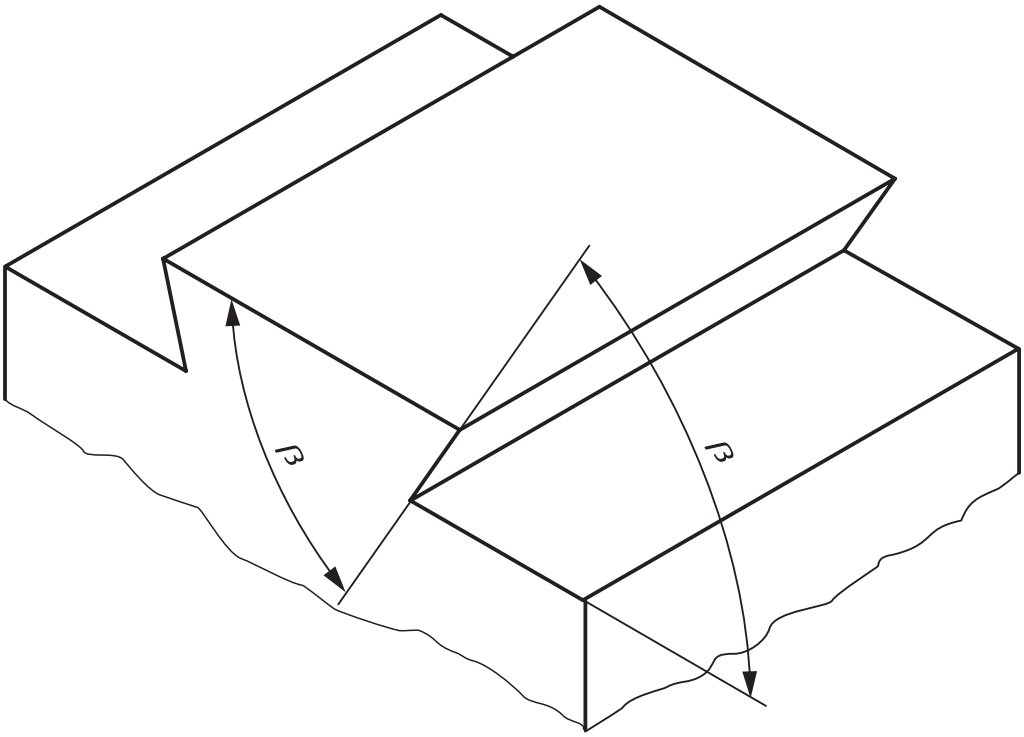

Figure 2 — Dovetail

iTeh STANDARD PREVIEW
(standards.iteh.ai)
ISO 2538-1:2014
https://standards.iteh.ai/catalog/standards/sist/fb984fd1-3576-4c58-b22b-05315252c4c2/iso-2538-1-2014

© ISO 2014 – All rights reserved