INTERNATIONAL STANDARD

ISO 14610

First edition
2012-08-01

Fine ceramics (advanced ceramics, advanced technical ceramics) — Test method for flexural strength of porous ceramics at room temperature

Céramiques techniques — Méthode d'essai de la résistance en flexion des céramiques poreuses à température ambiante

iTeh STANDARD PREVIEW
(standards.iteh.ai)

ISO 14610:2012
https://standards.iteh.ai/catalog/standards/sist/620a7608-34c9-4324-9d1d-1830b35583b9/iso-14610-2012

Reference number
ISO 14610:2012(E)

© ISO 2012

iTeh STANDARD PREVIEW
(standards.iteh.ai)

ISO 14610:2012
https://standards.iteh.ai/catalog/standards/sist/620a7608-34c9-4324-9d1d-1830b35583b9/iso-14610-2012



COPYRIGHT PROTECTED DOCUMENT

© ISO 2012

All rights reserved. Unless otherwise specified, no part of this publication may be reproduced or utilized in any form or by any means, electronic or mechanical, including photocopying and microfilm, without permission in writing from either ISO at the address below or ISO's member body in the country of the requester.

ISO copyright office
Case postale 56 • CH-1211 Geneva 20
Tel. + 41 22 749 01 11
Fax + 41 22 749 09 47
E-mail copyright@iso.org
Web www.iso.org

Published in Switzerland

 © ISO 2012 – All rights reserved

Contents

Page

Foreword ..... **iv**

1 Scope **1**

2 Normative references **1**

3 Terms and definitions **1**

4 Apparatus **2**
4.1 Test apparatus 2
4.2 Four-point flexure fixture 2
4.3 Micrometer calliper 3
4.4 Dial gauge 3
4.5 Vernier calliper 3

5 Test piece **3**
5.1 Test piece size 3
5.2 Test piece preparation 3
5.3 Number of test pieces 3

6 Testing method **4**
6.1 Measurement of width and thickness of test piece 4
6.2 Distance between internal support points (internal span) and distance between external support points (external span) 4
6.3 Crosshead displacement speed and rupture force 4
6.4 Force-displacement curve 4

7 Calculation **4**
7.1 Calculation of the flexural strength 4
7.2 Calculation of mean value and standard deviation 5

8 Test report **5**

iTeh STANDARD PREVIEW
(standards.iteh.ai)
ISO 14610:2012
https://standards.iteh.ai/catalog/standards/sist/620a7608-34c9-4324-9d1d-1830b35583b9/iso-14610-2012

© ISO 2012 – All rights reserved

Foreword

ISO (the International Organization for Standardization) is a worldwide federation of national standards bodies (ISO member bodies). The work of preparing International Standards is normally carried out through ISO technical committees. Each member body interested in a subject for which a technical committee has been established has the right to be represented on that committee. International organizations, governmental and non-governmental, in liaison with ISO, also take part in the work. ISO collaborates closely with the International Electrotechnical Commission (IEC) on all matters of electrotechnical standardization.

International Standards are drafted in accordance with the rules given in the ISO/IEC Directives, Part 2.

The main task of technical committees is to prepare International Standards. Draft International Standards adopted by the technical committees are circulated to the member bodies for voting. Publication as an International Standard requires approval by at least 75 % of the member bodies casting a vote.

Attention is drawn to the possibility that some of the elements of this document may be the subject of patent rights. ISO shall not be held responsible for identifying any or all such patent rights.

ISO 14610 was prepared by Technical Committee ISO/TC 206, *Fine ceramics*.

iTeh STANDARD PREVIEW
(standards.iteh.ai)

ISO 14610:2012
https://standards.iteh.ai/catalog/standards/sist/620a7608-34c9-4324-9d1d-1830b35583b9/iso-14610-2012

 © ISO 2012 – All rights reserved

Fine ceramics (advanced ceramics, advanced technical ceramics) — Test method for flexural strength of porous ceramics at room temperature

1 Scope

This International Standard describes a test method for determining the flexural strength of porous fine ceramics in air at room temperature.

2 Normative references

The following referenced documents are indispensable for the application of this document. For dated references, only the edition cited applies. For undated references, the latest edition of the referenced document (including any amendments) applies.

ISO 463:2006, *Geometrical Product Specifications (GPS) — Dimensional measuring equipment — Design and metrological characteristics of mechanical dial gauges.*

ISO 1101:2012, *Geometrical Product Specifications (GPS) — Geometrical tolerancing — Tolerances of form, orientation, location and run-out*

iTeh STANDARD PREVIEW
(standards.iteh.ai)

ISO 3611:2010, *Geometrical product specifications (GPS) — Dimensional measuring equipment: Micrometers for external measurements — Design and metrological characteristics*

ISO 14610:2012
https://standards.iteh.ai/catalog/standards/sist/620a7608-34c9-4324-9d1d-f830b3358369/iso-14610-2012

ISO 13385-1:2011, *Geometrical product specifications (GPS) — Dimensional measuring equipment — Part 1: Callipers; Design and metrological characteristics*

ISO 13385-2:2011, *Geometrical product specifications (GPS) — Dimensional measuring equipment — Part 2: Calliper depth gauges; Design and metrological characteristics*

ISO 4287:1997, *Geometrical Product Specifications (GPS) — Surface texture: Profile method — Terms, definitions and surface texture parameters*

ISO 14704, *Fine ceramics (advanced ceramics, advanced technical ceramics) — Test method for flexural strength of monolithic ceramics at room temperature*

ISO 20507:2003, *Fine ceramics (advanced ceramics, advanced technical ceramics) — Vocabulary*

ISO 80000-1:2009, *Quantities and units — Part 1: General.*

3 Terms and definitions

For the purposes of this document, the terms and definitions given in ISO 20507 and the following apply.

3.1
porous fine ceramics
ceramics with a porosity of 30 % to 60 % and a pore diameter of 0,05 µm to 100 µm, for applications such as filters, catalyst carriers, humidity sensors, or molecular sieves, excluding structured honeycomb cellular channels

3.2
four-point flexural strength
maximum value of the stress generated in flexure in a test piece up to rupture when the test piece is supported at two support points near its ends and loaded symmetrically at two loading points between them

© ISO 2012 – All rights reserved

3.3
four-point flexure fixture
a fixture design to provide defined four-point flexural loading to a test piece, as described in ISO 14704

4 Apparatus

4.1 Test apparatus

The test apparatus shall be able to maintain a constant crosshead displacement speed and shall be able to measure the force with an accuracy of ± 1 % of the maximum force.

4.2 Four-point flexure fixture

The four-point flexure fixture of similar construction to that shown in ISO 14704 shall be used (see Figure 1). The use of a semi- or fully-articulating fixture is required in order to prevent torsional deformation. The test piece is supported near its ends on a pair of freely moving bearings of equal size and of length greater than the test piece, and is loaded by a similar pair of bearings symmetrically positioned with respect to the support bearings. The material of the bearings shall be at least 140 GPa in elastic modulus, and free from plastic deformation and being broken midway through testing. The radius of curvature at the tip of the bearings shall be 2,0 mm to 3,0 mm, and their surface roughness shall be at most 0,40 µm*Ra* measured in accordance with ISO 4287.

NOTE The test piece and/or its bearings may move during the test. Precautions should be taken, where possible, to minimize such movement without restricting the flexural displacement, for example, by providing support rollers with restraint against a stop in the correct position, and by placing a vertical stop against the ends of the test piece.

iTeh STANDARD PREVIEW
(standards.iteh.ai)
ISO 14610:2012
https://standards.iteh.ai/catalog/standards/sist/620a7608-34c9-4324-9d1d-1830b35582b9/iso-14610-2012

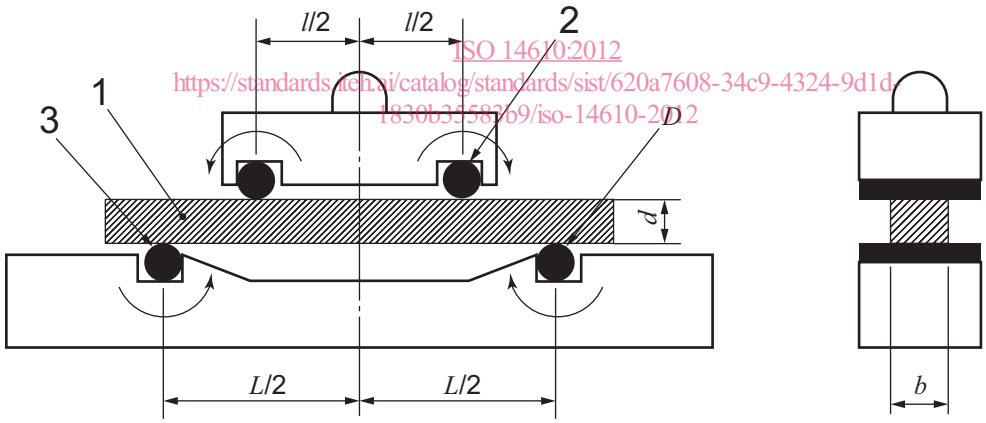

Dimensions in millimetres

Key
1 Specimen
2 Inner support
3 Outer support
D roller diameter (*D* = 4 mm to 6 mm)
L outer span (*L* = 60 mm ± 0,5 mm)
l inner span (*l* = 30 mm ± 0.5 mm)

Figure 1 — Four-point flexure fixture

© ISO 2012 – All rights reserved

4.3 Micrometer calliper

Micrometer callipers for external measurement having the same accuracy as specified in ISO 3611, or better, shall be used.

4.4 Dial gauge

Dial gauges having the same accuracy of minimum reading of 0,01 mm as specified in ISO 463, or better, shall be used.

4.5 Vernier calliper

Vernier callipers having the same accuracy of minimum reading of 0,05 mm as specified in ISO 13385, or better, shall be used.

5 Test piece

5.1 Test piece size

The shape of a test piece shall be a beam of uniform rectangular cross-section. Its standard dimensions shall be 70 mm ± 0,5 mm in total length, 8,0 mm ± 0,1 mm in width, and 6,0 mm ± 0,1 mm in thickness. The parallelism between the upper and lower surfaces of the test piece shall be better than 0,02 mm as specified in ISO 1101. The longer edges shall be rounded or chamfered by an amount of 0,1 mm to 0,3 mm as given in Figure 2. This chamfering shall be carried out with caution so as not to introduce defects resulting in a fracture-initiation site. The chamfering is not necessary when the grain size of material is larger than 0,1 mm.

iTeh STANDARD PREVIEW
(standards.iteh.ai)
ISO 14610:2012
https://standards.iteh.ai/catalog/standards/sist/6204f608-34c9-4324-9d1d-1830b35583b9/iso-14610-2012

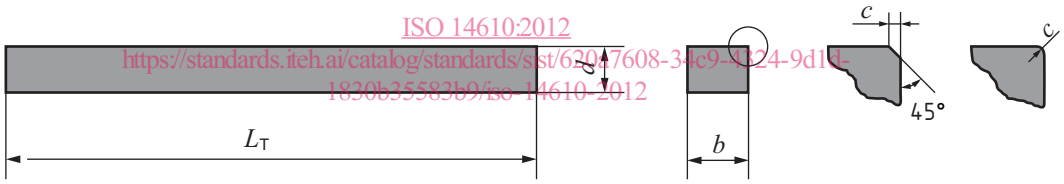

Key

L_T length of test piece (L_T = 70 mm ± 0,5 mm)

b width of test piece (b = 8,0 mm ± 0,1 mm)

d thickness of test piece (d = 6,0 mm ± 0,1 mm)

c chamfer or rounding (c = 0,1 mm to 0,3 mm)

Figure 2 — Test piece dimensions and chamfering of long edges

5.2 Test piece preparation

The surface shall be finished by grinding with a wheel whose grain size is 20 µm or smaller. The contamination by wax, if any, should be removed by organic solution or by heating at 773 K (500°C) for 1 h to evaporate wax.

5.3 Number of test pieces

The number of test pieces shall be at least 10.

© ISO 2012 – All rights reserved

6 Testing method

6.1 Measurement of width and thickness of test piece

The width and thickness of test pieces shall be measured to an accuracy of 0,01 mm by means of the micrometer callipers as specified in 4.3 or a measuring instrument having an equivalent accuracy or better. If, for any reason, different test piece dimensions have to be used, they shall be stated in the test report.

6.2 Distance between internal support points (internal span) and distance between external support points (external span)

These distances are respectively indicated by l and L in Figure 1, which shall be measured with a calliper.

NOTE Alternatively, this distance can be measured using a calibrated travelling microscope.

6.3 Crosshead displacement speed and rupture force

The test piece shall be centrally positioned in the test fixture. The force shall be applied to the test piece with the crosshead speed being 0,5 mm/min, and the maximum force up to rupture of the test piece shall be recorded.

6.4 Force-displacement curve

The relationship between the crosshead displacement and force shall be measured during a period from the test start-up to failure of the test piece.

iTeh STANDARD PREVIEW
(standards.iteh.ai)

7 Calculation

ISO 14610:2012
https://standards.iteh.ai/catalog/standards/sist/620a7608-34c9-4324-9d1d-f830b35583b9/iso-14610-2012

7.1 Calculation of the flexural strength

The four-point flexural strength shall be calculated from the measurements of individuals using Formula (1), and the calculated values shall be rounded to three significant figures according to ISO 80000-1.

$$\sigma_f = \frac{3P(L-l)}{2bd^2} \tag{1}$$

where

σ_f is the four-point flexural strength, in megapascals (MPa)

P is the maximum load up to rupture of the test piece, in newtons (N)

l is the distance between internal support points, in millimetres (mm)

L is the distance between external support points, in millimetres (mm)

b is the width of the test piece, in millimetres (mm)

d is the thickness of the test piece, in millimetres (mm)

© ISO 2012 – All rights reserved

7.2 Calculation of mean value and standard deviation

The mean value and the standard deviation for four-point flexural strength shall be calculated using Formulae (2) and (3) below, and the calculated values shall be rounded to three significant figures according to ISO 80000-1.

$$\bar{x} = \sum_{i=1}^{n} \frac{x_i}{n} \tag{2}$$

$$S = \sqrt{\sum_{i=1}^{n} \frac{(x_i - \bar{x})^2}{n-1}} \tag{3}$$

where

x_i is the calculated value of flexural strength of an individual test piece, in megapascals (MPa)

$\bar{x}$ is the mean value of flexural strength, in megapascals (MPa)

S is the standard deviation of flexural strength, in megapascals (MPa)

n is the number of test pieces

8 Test report

iTeh STANDARD PREVIEW
(standards.iteh.ai)

The test report shall include the following information:

ISO 14610:2012
https://standards.iteh.ai/catalog/standards/sist/620a7608-34c9-4324-9d1d-1830b35583b9/iso-14610-2012

a) Name and class of material

b) Dimensions (mean values) of test piece

c) Name of testing machine and its type

d) Test conditions (capacity of testing machine, load cell, crosshead speed, temperature, humidity)

e) Number of test pieces

f) Flexural strength for each test piece tested

g) Mean and standard deviation of flexural strength

h) Force-displacement curve (typical example)

© ISO 2012 – All rights reserved