INTERNATIONAL STANDARD

ISO 3548-1

First edition
2014-06-15

Plain bearings — Thin-walled half bearings with or without flange —

Part 1: Tolerances, design features and methods of test

Paliers lisses — Demi-coussinets minces à ou sans collerette — Partie 1: Tolérances, caractéristiques de conception et méthodes d'essai

Reference number
ISO 3548-1:2014(E)

ISO copyright office
Case postale 56 • CH-1211 Geneva 20
Tel. + 41 22 749 01 11
Fax + 41 22 749 09 47
E-mail copyright@iso.org
Web www.iso.org

Published in Switzerland

Contents

Page

Foreword

ISO (the International Organization for Standardization) is a worldwide federation of national standards bodies (ISO member bodies). The work of preparing International Standards is normally carried out through ISO technical committees. Each member body interested in a subject for which a technical committee has been established has the right to be represented on that committee. International organizations, governmental and non-governmental, in liaison with ISO, also take part in the work. ISO collaborates closely with the International Electrotechnical Commission (IEC) on all matters of electrotechnical standardization.

The procedures used to develop this document and those intended for its further maintenance are described in the ISO/IEC Directives, Part 1. In particular the different approval criteria needed for the different types of ISO documents should be noted. This document was drafted in accordance with the editorial rules of the ISO/IEC Directives, Part 2 (see www.iso.org/directives).

Attention is drawn to the possibility that some of the elements of this document may be the subject of patent rights. ISO shall not be held responsible for identifying any or all such patent rights. Details of any patent rights identified during the development of the document will be in the Introduction and/or on the ISO list of patent declarations received (see www.iso.org/patents).

Any trade name used in this document is information given for the convenience of users and does not constitute an endorsement.

For an explanation on the meaning of ISO specific terms and expressions related to conformity assessment, as well as information about ISO's adherence to the WTO principles in the Technical Barriers to Trade (TBT) see the following URL: Foreword - Supplementary information

The committee responsible for this document is ISO/TC 123, *Plain Bearings*, Subcommittee SC 3 *Dimensions, tolerances and constructions details.*,

This first edition of ISO 3548-1 cancels and replaces the second edition of ISO 3548:1999, which has been technically revised.

ISO 3548 consists of the following parts, under the general title *Plain bearings — Thin walled half bearings with or without flange*:

— *Part 1: Tolerances, design features and methods of test*

— *Part 2: Measurement of wall thickness and flange thickness*

— *Part 3: Measurement of peripheral length*

Plain bearings — Thin-walled half bearings with or without flange —

Part 1: Tolerances, design features and methods of test

1 Scope

This part of ISO 3548 specifies tolerances, design features, and test methods for thin-walled half bearings with integral flange up to an outside diameter of D_O = 250 mm and without flange up to an outside diameter of D_O = 500 mm. Due to the variety of design, it is, however, not possible to standardize the dimensions of the half bearings.

Half bearings according to this part of ISO 3548 are predominantly used in reciprocating machinery and consist of a steel backing and one or more bearing metal layers on the inside.

In reciprocating machinery, flanged half bearings can be used in connection with half bearings without flange.

Alternatively, to serve as a flanged half bearing, it is possible to use a half bearing without flange together with two separate half thrust washers according to ISO 6526; or a half bearing with assembled flanges.

NOTE All dimensions and tolerances are given in millimetres.

2 Normative references

The following documents, in whole or in part, are normatively referenced in this document and are indispensable for its application. For dated references, only the edition cited applies. For undated references, the latest edition of the referenced document (including any amendments) applies.

ISO 4288, *Geometrical Product Specifications (GPS) — Surface texture: Profile method — Rules and procedures for the assessment of surface texture*

ISO 6524, *Plain bearings — Thin-walled half bearings — Checking of peripheral length*

ISO 6526, *Plain bearings — Pressed bimetallic half thrust washers — Features and tolerances*

3 Symbols

See Figures 1 and 2 and Table 1.

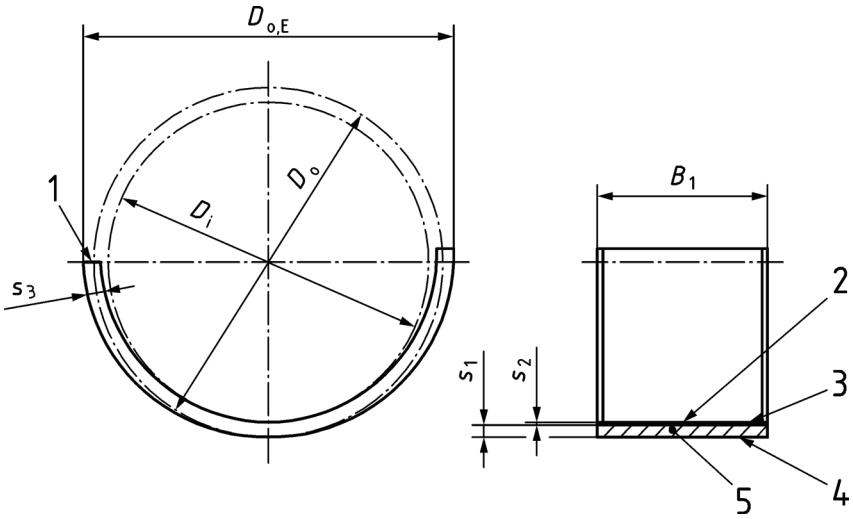

Key

1 joint face
2 sliding surface
3 bearing metal
4 bearing back
5 steel back

Figure 1 — Half bearing without flange
(with positive free spread)

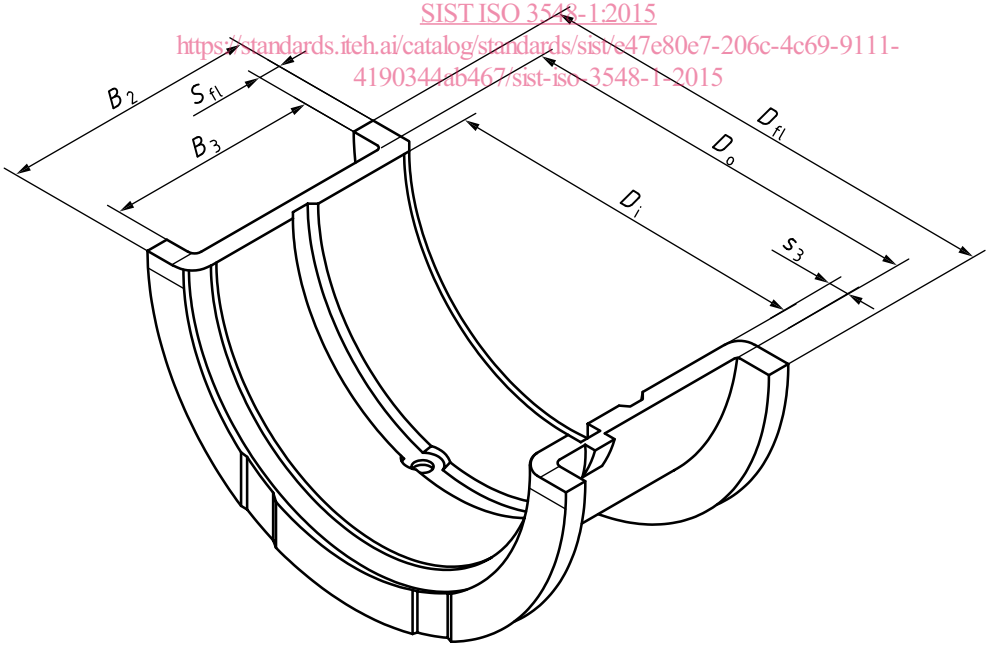

Figure 2 — Flange half bearing
(integral or assembled, excluding free spread)

Table 1 — Symbols and units

Symbol	Term	Unit
a_1	Measuring point perpendicular to plane of joint face	mm
A_{cal}	Reduced area of cross section (calculated value) of half bearing	mm^2
b_H	Housing width	mm
B_1	Half bearing width (without flange)	mm
B_2	Flange half bearing width	mm
B_3	Distance between flanges	mm
C_1	Outside chamfer	mm
C_2	Inside chamfer	mm
d_{ch}	Diameter of the checking block bore	mm
d_H	Housing diameter	mm
D_{fl}	Outside diameter of flange	mm
D_i	Nominal Inside diameter of the half bearing (bearing bore)	mm
D_o	Nominal Outside diameter of the half bearing	mm
$D_{o,E}$	Outside diameter of the half bearing in the free state (with free spread)	mm
e_B	Amount of eccentricity	mm
F	Test force	N
F_{ax}	Axial test force for assembled flange bearings	N
h	Crush height, $h = h_1 + h_2$ (in checking method B)	mm
p	Amount of free spread	mm
s_{fl}	Flange thickness	mm
s_1	Thickness of the steel backing	mm
s_2	Bearing metal thickness	mm
s_3	Half bearing wall thickness	mm
s_4	Wall thickness at base of groove	mm
u	Amount of wall thickness reduction for eccentric bearing	mm

4 Dimensions and tolerances

4.1 Housing diameter, half bearing outside diameter and crush height

The housing diameter should be manufactured to ISO H6 limits. Thereby the half bearing outside diameter shall be selected with such an oversize that an adequate interference fit is ensured in the housing diameter.

In the case of housings made from materials having a high coefficient of expansion or where other factors such as housing dimensional stability are involved, the housing size may depart from tolerance class H6 but shall always be produced in accordance with a grade 6 tolerance.

The half bearing in a free state is flexible so that its outside diameter cannot be measured directly. Instead of this, its peripheral length is determined by means of special checking fixtures. The peripheral length results from the periphery of the checking block bore and the crush height taking into account the reduction under a given checking load per joint face (see Clause 6). For the calculation of the effective interference fit of the half bearings in the housing, see Reference [5].

The tolerances given in Table 2 for the crush height apply to half bearings with machined joint faces. Different materials and housing design require different interference fits, therefore only tolerances are given in Table 2.

4.2 Half bearing wall thickness and bearing bore

Nominal dimensions to be preferred for the wall thickness of the bearing are given in Table 2 (the particulars of the wall thickness for each application cannot be specified in general). Therefore, only tolerances can be given for the wall thickness. These tolerances and the surface roughnesses of the bearing back and the sliding surface of half bearings with or without electroplated antifriction layers are given in Table 2.

The tolerance for the half bearing wall thickness depends on the fact whether the bearing bore is subject to a final machining operation (i.e. “as machined”) or whether the bearing bore is electroplated without further machining (i.e. “as-plated”).

Slight surface deformations are acceptable on the outside diameter of the bearing provided that they are not numerous. However, the measurement of the wall thickness shall not be carried out in these areas.

The bearing bore in the fitted state results from the housing bore which is elastically enlarged by the press fit, reduced by twice the value of the half bearing wall thickness.[5]

NOTE In certain applications it might be necessary to use plain or flange half bearings with eccentric bores, i.e. the wall thickness of the half bearing decreases uniformly from the crown to the joint faces (see Figures 3 and 4).

The eccentricity e_B is characterized in a radial plane by the distance between the centre x_1 of the bearing outside surface and the centre x_2 of the bearing bore. e_B is not dimensioned specifically. The eccentricity is controlled by the specified reduction u which is measured at a vertical distance a_1 from the plane of the joint face. (For guidance of draughtsmen, a_1 is generally specified so that the angle α_2 is approximately 25° from the joint face). It is subject to agreement between the user and manufacturer.

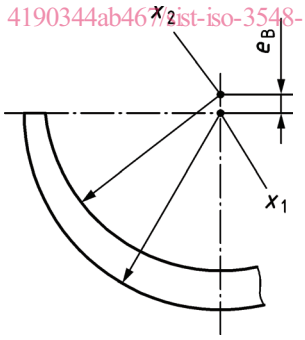

Figure 3 — Eccentric bearing bore of half bearing

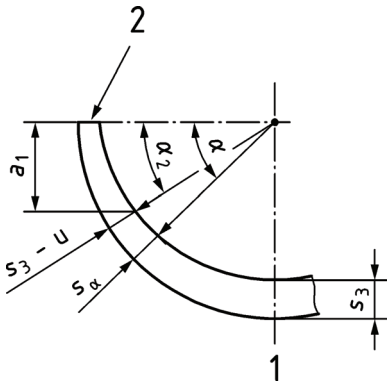

Key

1 crown

2 joint face

Figure 4 — Example of the wall thickness at different angles

The tolerance limit for the behaviour of wall thickness can be calculated using Formulae 1 and 2:

$$s_{\alpha,\mathrm{BL}} = s_{3,\mathrm{act}} - \mathrm{BL}_u \times \frac{1-\sin\alpha}{1-\sin\alpha_2} \tag{1}$$

$$s_{\alpha,\ \mathrm{UL}} = s_{3,\ \mathrm{act}} - \mathrm{UL}_u \times \frac{1-\sin\alpha}{1-\sin\alpha_2} \tag{2}$$

where

BL_u is the bottom limit of u;

UL_u is the upper limit of u;

$s_{3,\ \mathrm{act}}$ is the actual value of s_3;

$s_{\alpha,\ \mathrm{BL}}$ is the bottom value of s_α;

$s_{\alpha,\ \mathrm{UL}}$ is the upper value of s_α.

For an example of calculations, see Annex A.

4.3 Width of half bearing, distance between flanges, outside diameter of flange and flange thickness

The nominal dimension for the half bearing width and the distance between flanges depends upon the type of application, the common ratio being $B_1(B_2)/D_\mathrm{i} \leq 0{,}5$. The tolerances for the half bearing width are given in Table 2. The flange outside diameter should be smaller than the diameter of the shoulder of the shaft and smaller than the diameter of the housing block.

In most cases the flange thickness is fixed in conformity with the half bearing wall thickness and, in general, a tolerance is fixed only for the flange thickness of the pressure loaded side in order to ensure that these flanges of the upper and lower half bearing have approximately the same thickness. In this case, the position of these flanges with respect to the locating lips is fixed.

If the upper and lower half bearings are of the same design, then generally the two flanges of one half bearing shall have the same thickness within the tolerance range fixed in Table 2. In that case, the flange thicknesses result from the bearing width and the distance between flanges. Nevertheless, another tolerance can be accepted after agreement between the user and the manufacturer (see Clause 7).

4.4 Free spread

Free spread is influenced by factors such as the lining material, its thickness and its physical properties, by the bearing backing material and its properties, and by the operating temperature of the assembly. Since these features are not specified in this part of ISO 3548, it is not possible to specify free spread. Free spread shall in all circumstances be positive. After operation in the combustion engine at normal conditions, a sufficient amount of free spread remains in the bearing to enable it to be refitted. The actual amount of free spread shall be the subject of agreement between the manufacturer and user.

Half bearings for reciprocating machinery normally have a free spread of 0,2 mm up to 3 mm. For very large, thin-walled half bearings, the free spread may be greater but it shall not be such that the half bearing cannot be fitted into the housing.

Table 2 — Dimensions, tolerances and limit deviations for half bearings with and without flange

Housing diameter		Wall thickness	Tolerance or limit deviation for[a]										Surface roughness[bc] µm	
			Wall thickness		Flange thickness[de]	Half bearing width			Flange outside diameter	Distance between flanges[e]	Housing width	Crush height[f]	Bearing back	Sliding surface
d_H		s_3	s_3		s_{fl}	B_1	B_2		D_{fl}	B_3	b_H	h	Ra	Ra
		preferred nominal dimension	without electroplated antifriction layer	with electroplated antifriction layer[g]		without flange	Integral flange bearing	Assembled flange bearing[h]						
>	≤													
—	50	1,5 1,75 2 2,5	0,008	—[a]	0 -0,05	0 -0,3	0 -0,05	0 -0,12	±1	+0,05 0	-0,02 -0,07	0,03	0,8	0,8
50	80	1,75 2 2,5 3	0,008	0,012	0 -0,05	0 -0,3	0 -0,05	0 -0,12	±1	+0,05 0	-0,02 -0,07	0,045	1,2	0,8
80	120	2 2,5 3 3,5	0,01	0,015	0 -0,05	0 -0,3	0 -0,07	0 -0,12	±1	+0,07 0	–0,02 –0,07	0,04	0,8	0,8
120	160	3 3,5 4 5	0,015	0,022	0 -0,05	0 -0,4	0 -0,07	0 –0,2	±1,5	+0,07 0	–0,02 –0,1	0,045	1,2	0,8
160	200	3,5 4 5	0,015	0,022	0 –0,05	0 –0,4	0 -0,12	0 –0,2	±1,5	+0,07 0	–0,02 –0,1	0,05	1,2	0,8
200	250	4 5 6	0,02	0,03	0 –0,05	0 –0,4	0 –0,12	0 –0,2	±1,5	+0,07 0	–0,02 –0,1	0,055	1,2	0,8

Table 2 *(continued)*

Housing diameter		Wall thickness	Tolerance or limit deviation for[a]										Surface roughness[bc] µm	
			Wall thickness		Flange thickness[de]	Half bearing width			Flange outside diameter	Distance between flanges[e]	Housing width	Crush height[f]	Bearing back	Sliding surface
d_H		s_3	s_3		s_{fl}	B_1	B_2		D_{fl}	B_3	b_H	h	Ra	Ra
		preferred nominal dimension	without electroplated antifriction layer	with electroplated antifriction layer[g]		without flange	Integral flange bearing	Assembled flange bearing[h]						
>	≤													
250	315	5	0,02	0,03	—	0 −0,5	—	—	—	—	—	0,06	1,6	1,2
		5												
		8												
315	400	6	0,025	0,035	—	0 −0,5	—	—	—	—	—	0,07	1,6	1,2
		8												
		10												
400	500	8	0,03	0,04	—	0 −0,5	—	—	—	—	—	0,07	1,6	1,2
		10												
		12												

a Subject to agreement between the user and manufacturer.

b Surface roughness in accordance with ISO 4288.

c Surface roughness measurements of bearings with an electroplated antifriction layer may be unreliable due to penetration of the soft layer by the stylus of the measuring equipment.

d On the pressure loaded side.

e The limit deviations shall not be added.

f See Clause 6 and Figures 18 and 19. For crush height of bearings with an electroplated antifriction layer and without subsequent machining of the joint faces add 0,01 mm to the tolerance value.

g For larger half bearings, thicker electroplated antifriction layers are often used which require another machining operation. In such cases, the tolerances for sliding surfaces without electroplated antifriction layer apply.

h Checked as shown in 7.1 and 7.2.

5 Design features

Dimensions are by agreement and tolerances shall be as given in Tables 3 and 4.

5.1 Locating lip and recess

See Figures 5, 6, and 7.