INTERNATIONAL STANDARD

# ISO 16092-1

First edition
2017-12

# Machine tools safety — Presses —

## Part 1: General safety requirements

*Sécurité des machines-outils — Presses —*

*Partie 1: Exigences générales de sécurité*



Reference number
ISO 16092-1:2017(E)

ISO copyright office
Ch. de Blandonnet 8 • CP 401
CH-1214 Vernier, Geneva, Switzerland
Tel. +41 22 749 01 11
Fax +41 22 749 09 47
copyright@iso.org
www.iso.org

# Contents

Page

 

# Foreword

ISO (the International Organization for Standardization) is a worldwide federation of national standards bodies (ISO member bodies). The work of preparing International Standards is normally carried out through ISO technical committees. Each member body interested in a subject for which a technical committee has been established has the right to be represented on that committee. International organizations, governmental and non-governmental, in liaison with ISO, also take part in the work. ISO collaborates closely with the International Electrotechnical Commission (IEC) on all matters of electrotechnical standardization.

The procedures used to develop this document and those intended for its further maintenance are described in the ISO/IEC Directives, Part 1. In particular the different approval criteria needed for the different types of ISO documents should be noted. This document was drafted in accordance with the editorial rules of the ISO/IEC Directives, Part 2 (see www.iso.org/directives).

Attention is drawn to the possibility that some of the elements of this document may be the subject of patent rights. ISO shall not be held responsible for identifying any or all such patent rights. Details of any patent rights identified during the development of the document will be in the Introduction and/or on the ISO list of patent declarations received (see www.iso.org/patents).

Any trade name used in this document is information given for the convenience of users and does not constitute an endorsement.

For an explanation on the meaning of ISO specific terms and expressions related to conformity assessment, as well as information about ISO's adherence to the World Trade Organization (WTO) principles in the Technical Barriers to Trade (TBT) see the following URL: www.iso.org/iso/foreword.html.



The committee responsible for this document is ISO/TC 39, *Machine tools*, Subcommittee SC 10, *Safety.*

A list of all parts in the ISO 16092 series can be found on the ISO website.



 

# Introduction

This document is a type C standard as stated in ISO 12100.

This document is of relevance, in particular, for the following stakeholder groups representing the market players with regard to machinery safety:

— machine manufacturers (small, medium and large enterprises);

— health and safety bodies (regulators, accident prevention organizations, market surveillance etc.).

Others can be affected by the level of machinery safety achieved with the means of the document by the above-mentioned stakeholder groups:

— machine users/employers (small, medium and large enterprises);

— machine users/employees (e.g. trade unions, organizations for people with special needs);

— service providers, e.g. for maintenance (small, medium and large enterprises);

— consumers (in case of machinery intended for use by consumers).

The above-mentioned stakeholder groups have been given the possibility to participate at the drafting process of this document.

The machinery concerned and the extent to which hazards, hazardous situations or hazardous events are covered are indicated in the Scope of this document.



When requirements of this type-C standard are different from those which are stated in type-A or type-B standards, the requirements of this type-C standard take precedence over the requirements of the other standards for machines that have been designed and built according to the requirements of this type-C standard."



This document is intended to be applied with at least one of the other relevant parts (ISO 16092-2 for mechanical presses, ISO 16092-3 for hydraulic presses and, ISO 16092-4 for pneumatic presses).

 

# Machine tools safety — Presses —

## Part 1:
## General safety requirements

### 1 Scope

This document specifies technical safety requirements and measures to be adopted by persons undertaking the design, manufacture and supply of presses which are intended to work cold metal or material partly of cold metal, but which can be used in the same way to work other sheet materials (e.g. cardboard, plastic, rubber, leather, etc.).

NOTE 1 The design of a machine includes the study of the machine itself, taking into account all phases of the "life" of the machine mentioned in ISO 12100:2010, 5.4, and the drafting of the instructions related to all the above phases.

The requirements in this document take account of intended use, as defined in ISO 12100:2010, 3.23, as well as reasonably foreseeable misuse, as defined in ISO 12100:2010, 3.24. This document presumes access to the press from all directions, deals with all significant hazards during the various phases of the life of the machine described in Clause 4, and specifies the safety measures for both the operator and other exposed persons.



NOTE 2 All significant hazards means those identified or associated with presses at the time of the publication of this document.



This document applies to presses which can function independently and can also be used as a guide for the design of presses which are intended to be integrated in a manufacturing system.

The covered presses transmit force mechanically to cut, form, or work cold metal or other sheet materials by means of tools or dies attached to or operated by slides/ram in range in size from small high speed machines with a single operator producing small workpieces to large relatively slow speed machines with several operators and large workpieces.

This document does not cover machines whose principal designed purpose is:

a) metal cutting by guillotine;

b) attaching a fastener, e.g. riveting, stapling or stitching;

c) bending or folding by press brakes or folding machines;

d) straightening;

e) turret punch pressing;

f) extruding;

g) drop forging or drop stamping;

h) compaction of metal powder;

i) single purpose punching machines designed exclusively for profiles, e.g. used in the construction industry;

j) spot welding;

k) tube bending;

 

l) working by pneumatic hammer.

This document does not cover hazards related to the use of presses in explosive atmospheres.

This document covers the safety requirements related to the use of programmable electronic systems (PES) and programmable pneumatic systems (PPS).

This document is not applicable to presses which are manufactured before the date of its publication.

This document deals with the common significant hazards, hazardous situations and events relevant to presses and ancillary devices which are intended to work cold metal or material partly of cold metal (see Clause 4). This document defines the common safety requirements for presses defined in this clause and shall be used in connection with other parts of the ISO 16092 series.

Specific hazards which are related to the type presses used are dealt with in ISO 16092-2, ISO 16092-3 and ISO 16092-4.

## 2 Normative references

The following documents are referred to in the text in such a way that some or all of their content constitutes requirements of this document. For dated references, only the edition cited applies. For undated references, the latest edition of the referenced document (including any amendments) applies.

ISO 230-5:2000, *Test code for machine tools — Part 5: Determination of the noise emission*

ISO 7731, *Ergonomics — Danger signals for public and work areas — Auditory danger signals*



ISO 4413:2010, *Hydraulic fluid power — General rules and safety requirements for systems and their components*

ISO 4414:2010, *Pneumatic fluid power — General rules and safety requirements for systems and their components*



ISO 11428, *Ergonomics — Visual danger signals — General requirements, design and testing*

ISO 12100:2010, *Safety of machinery — General principles for design — Risk assessment and risk reduction*

ISO 13732-1:2006, *Ergonomics of the thermal environment — Methods for the assessment of human responses to contact with surfaces — Part 1: Hot surfaces*

ISO 13849 (all parts), *Safety of machinery — Safety-related parts of control systems*

ISO 13850, *Safety of machinery — Emergency stop function — Principles for design*

ISO 13851:2002, *Safety of machinery — Two-hand control devices — Functional aspects and design principles*

ISO 13854:1996, *Safety of machinery — Minimum gaps to avoid crushing of parts of the human body*

ISO 13855:2010, *Safety of machinery — Positioning of safeguards with respect to the approach speeds of parts of the human body*

ISO 13857:2008, *Safety of machinery — Safety distances to prevent hazard zones being reached by upper and lower limbs*

ISO 14119:2013, *Safety of machinery — Interlocking devices associated with guards — Principles for design and selection*

ISO 14120:2015, *Safety of machinery — Guards — General requirements for the design and construction of fixed and movable guards*

ISO 14122 (all parts), *Safety of machinery — Permanent means of access to machinery*

 

ISO/TR 11688-1, *Acoustics — Recommended practice for the design of low-noise machinery and equipment — Part 1: Planning*

IEC 60204-1:2016, *Safety of machinery — Electrical equipment of machines — Part 1: General requirements*

IEC 60947-5-8, *Low-voltage switchgear and controlgear — Part 5-8: Control circuit devices and switching elements — Three-position enabling switches*

IEC 61496-1:2012, *Safety of machinery — Electro-sensitive protective equipment — Part 1: General requirements and test*

IEC 61496-2:2013, *Safety of machinery — Electro-sensitive protective equipment — Part 2: Particular requirements for equipment using active opto-electronic protective devices (AOPDs)*

IEC 61496-3, *Safety of machinery — Electro-sensitive protective equipment — Part 3: Particular requirements for Active Opto-electronic Protective Devices responsive to Diffuse Reflection (AOPDDR)*

## 3 Terms and definitions

For the purposes of this document, the terms and definitions given in ISO 12100:2010 and ISO 13849-1:2015 and the following apply.

ISO and IEC maintain terminological databases for use in standardization at the following addresses:

— ISO Online browsing platform: available at https://www.iso.org/obp

— IEC Electropedia: available at http://www.electropedia.org/



### 3.1 Groups of presses defined in the different parts of the ISO 16092 series



**3.1.1**
**press**
machine designed or intended to transmit energy to a *tool/punch* (3.2.13) for the purpose of the working (e.g. forming or shaping) of cold metal or material partly of cold metal between the tools

**3.1.2**
**mechanical press**
*press* (3.1.1) designed or intended to transmit energy from a prime mover to a *tool/punch* (3.2.13) by mechanical means using a clutch mechanism which transmits torque to impart motion of the flywheel to the slide

Note 1 to entry: See Figure 1.

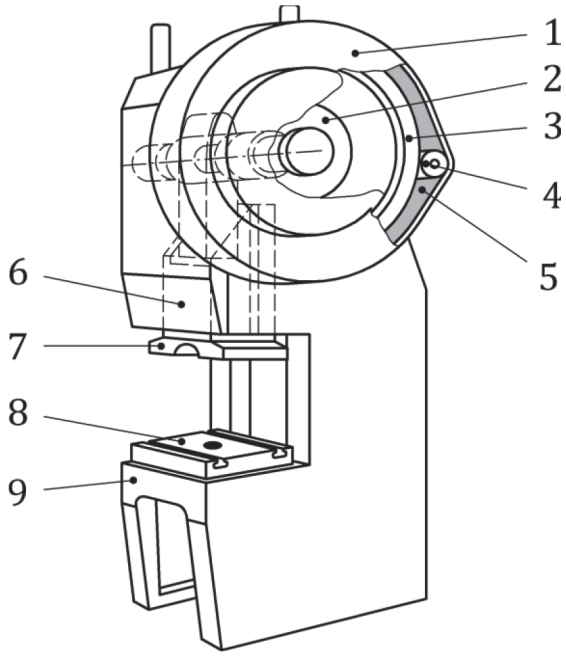


**Key**

1 flywheel guard
2 friction clutch, part revolution clutch
3 flywheel
4 motor pulley
5 belt
6 slide
7 slide flange, tool holder
8 bolster/bed-plate
9 bed



**Figure 1 — Example of a friction clutch (part revolution clutch) press (tools area safeguards not shown)**

**3.1.3**
**mechanical servo press**
*press* (3.1.1) designed or intended to transmit energy to a *tool/punch* (3.2.13) by mechanical means using a servo drive mechanism without clutch mechanism to generate torque to impart motion to the slide

Note 1 to entry: See Figure 2.

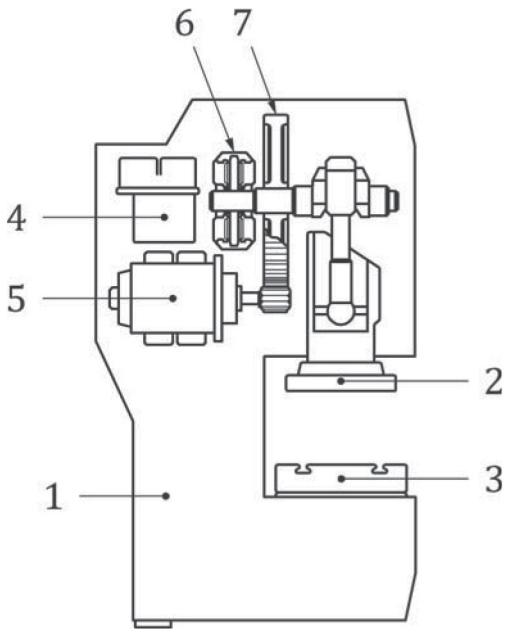


**Key**

1 frame
2 *slide/ram* (3.2.12)
3 bolster
4 servo drive (controller)
5 servo motor
6 mechanical brake
7 gear



**Figure 2 — Example of a mechanical servo press**

**3.1.4**
**hydraulic press**
*press* (3.1.1) designed or intended to transmit energy by linear movement between closing *tools* (3.2.15) by hydraulic means

Note 1 to entry: Such energy is produced by the effects of hydrostatic pressure (see Figure 3).

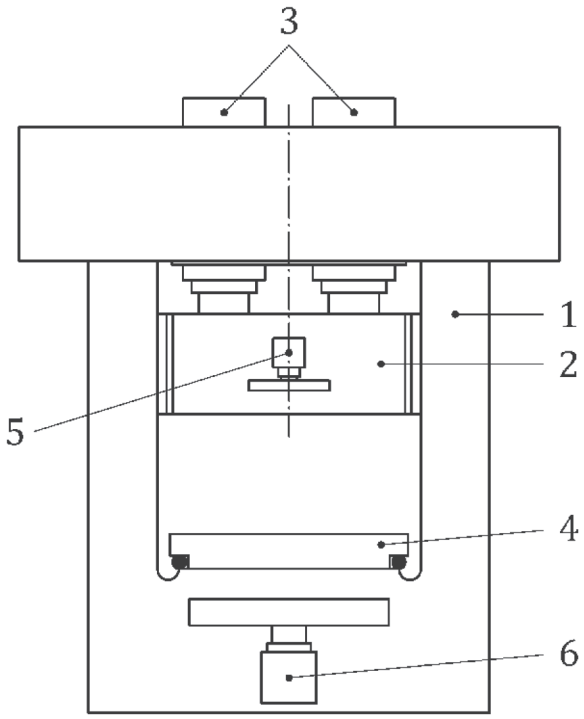




**Key**

1 frame
2 *slide/ram* (3.2.12)
3 main cylinders
4 bolster
5 ejector — slide
6 cushion — bed

**Figure 3 — Example of a down-stroking hydraulic press**

**3.1.5**
**pneumatic press**
*press* (3.1.1) designed or intended to transmit energy by linear movement between closing *tools* (3.2.15) by pneumatic means

Note 1 to entry: Such energy is produced by the effects of aerostatic pressure (see Figure 4).

 

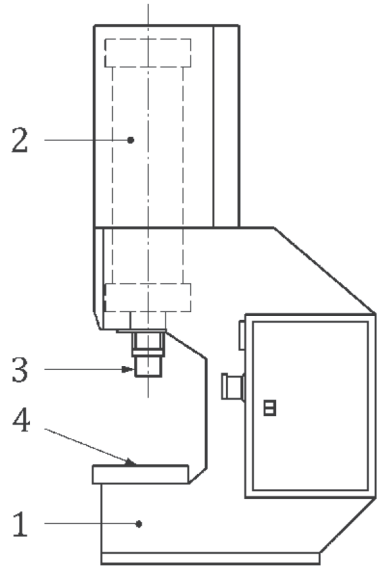


**Key**

1 frame

2 main cylinder

3 *slide/ram* (3.2.12)

4 bolster



**Figure 4 — Example of a down-stroking pneumatic press**



## 3.2 General terms used for parts of a press used in the ISO 16092 series

**3.2.1**
**tools area**
area between moving *tools* (3.2.15), moving slide, moving *die cushions* (3.2.6), workpiece ejectors

**3.2.2**
**ancillary device**
any device intended for use within the press *tools* (3.2.15) and integrated with the *press* (3.1.1)

Note 1 to entry: Examples of these devices are tools/workpiece lubrication systems, load and unload and *transfer system* (3.2.3).

**3.2.3**
**transfer system**
integrated device(s) of the *press* (3.1.1) which moves a material/workpiece through the *tools area* (3.2.1)

Note 1 to entry: Transfer system is also known as “feeder system” or “robot transfer system”.

**3.2.4**
**dead centre**
point at which the *tool/punch* (3.2.13), during its travel, is:

— either nearest/closest to the die (generally, it corresponds to the end of the closing stroke), known as bottom dead centre (BDC);

— or furthest from the die (generally, it corresponds to the end of the opening stroke), known as top dead centre (TDC)

**3.2.5**
**die**
fixed part of the *tool* (3.2.15)

**3.2.6**
**die cushion**
accessory for a *die* (3.2.5) which accumulates and releases, or absorbs, force as required in some *press* (3.1.1) operations

**3.2.7**
**early opening interlocking guard**
guard associated with an interlocking device which, if opened when any dangerous movement in the *tools area* (3.2.1) has ceased, prevents any dangerous movement when it is opened and does not interrupt the operating *cycle* (3.4.4)

Note 1 to entry: For example, a guard is opened when any dangerous phase of a closing stroke has passed and does not interrupt the operating cycle.

**3.2.8**
**guard locking**
measures to maintain an interlocking guard in the closed position until the risk of injury from the hazardous machine *functions* (3.4.3) has ceased

**3.2.9**
**inching device**
control device, a single actuation of which, together with the control system of the machine, permits only a limited amount of travel of a machine element

[SOURCE: ISO 12100:2010, 3.28.9]



**3.2.10**
**part detector**
device which detects the workpiece and/or the correct position of the workpiece and which permits or prevents the initiation of the stroke

**3.2.11**
**position switch**
switch which is operated by a moving part of the machine when this part reaches or leaves a predetermined position

**3.2.12**
**slide/ram**
main reciprocating *press* (3.1.1) member which holds the *tool/punch* (3.2.13)

**3.2.13**
**tool/punch**
moving part of the *tool* (3.2.15)

**3.2.14**
**tool protective device**
device which protects the *tool/punch* (3.2.13) against damage by stopping the stroke or by preventing its start

**3.2.15**
**tool**
combination of *tool/punch* (3.2.13) and *die* (3.2.5)

**3.2.16**
**closed tool**
**tool – closed**
*tool* (3.2.15) designed and constructed to be inherently safe

Note 1 to entry: See Figure B.1.

**3.2.17**
**electro-sensitive protective equipment**
**ESPE**
assembly of devices and/or components working together for protective tripping or presence-sensing purposes comprising:

— a sensing device;

— controlling *monitoring* (3.3.1) devices;

— output devices;

— all interconnecting wiring

[SOURCE: ISO 13855:2010, 3.1.4, modified — "at minimum" was deleted in the first part of the definition, and the last list item replaced by 2 list items.]

**3.2.18**
**active opto-electronic protective device**
**AOPD**

device whose sensing *function* (3.4.3) is performed by opto-electronic emitting and receiving elements detecting the interruption of optical radiation, generated within the device, by an opaque object present in the specified detection zone

Note 1 to entry: IEC 61496–2 gives detailed provisions.



**3.2.19**
**blanking**
optional *function* (3.4.3) that permits an object of a size greater than the detection capability of the *AOPD* (3.2.18) to be located within the detection zone without causing an OFF-state of the output signal switching device(s) [OSSD(s)]

Note 1 to entry: Fixed blanking is a technique wherein the locations of the blanked areas of the detection zone do not change during operation. The detection capability of the other parts of the detection zone remains unchanged.

Note 2 to entry: Floating blanking is a technique wherein the blanked area of the detection zone follows the location of a moving object(s) during operation. The detection capability of the other areas remains unchanged.

**3.2.20**
**active opto-electronic protective device responsive to diffuse reflection**
**AOPDDR**
device, whose sensing *function* (3.4.3) is performed by opto-electronic emitting and receiving elements, that detects the diffuse reflection of optical radiations generated within the device by an object present in a detection zone specified in two dimensions

[SOURCE: IEC 61496-3:2008, 3.301]

**3.2.21**
**presence-sensing device**
**PSD**
*electro-sensitive protective equipment (ESPE)* (3.2.17) which uses electro-sensitive means or a pressure-sensitive equipment (PSPE) which uses pressure-sensitive means to determine the presence of a specified object within a detection zone

## 3.3 General terms used for control functions for presses