SLOVENSKI STANDARD
SIST EN 60695-2-1/0:1999

01-julij-1999

Fire hazard testing -- Part 2: Test methods -- Section 1/sheet 0: Glow-wire test methods – General (IEC 60695-2-1/0:1994)

Fire hazard testing -- Part 2: Test methods -- Section 1/sheet 0: Glow-wire test methods - General

Prüfungen zur Beurteilung der Brandgefahr -- Teil 2: Prüfverfahren -- Hauptabschnitt 1/Blatt 0: Prüfungen mit dem Glühdraht - Allgemeines

Essais relatifs aux risques du feu -- Partie 2: Méthodes d'essai -- Section 1/feuille 0: Méthodes d'essai au fil incandescent - Généralités

Ta slovenski standard je istoveten z: EN 60695-2-1/0:1996

ICS:

13.220.40	Sposobnost vžiga in obnašanje materialov in proizvodov pri gorenju	Ignitability and burning behaviour of materials and products
29.020	Elektrotehnika na splošno	Electrical engineering in general

SIST EN 60695-2-1/0:1999 en

EUROPEAN STANDARD

NORME EUROPÉENNE

EUROPÄISCHE NORM

EN 60695-2-1/0

December 1996

ICS 13.220.40

Descriptors: Fire hazard, glow-wire test methods

English version

Fire hazard testing
Part 2: Test methods
Section 1/sheet 0: Glow-wire test methods — General

(IEC 695-2-1/0:1994)

Essais relatifs aux risques du feu
Partie 2: Méthodes d'essai
Section 1/feuille 0: Méthodes d'essai au fil incandescent — Généralités
(CEI 695-2-1/0:1994)

Prüfungen zur Beurteilung der Brandgefahr
Teil 2: Prüfverfahren
Hauptabschnitt 1/Blatt 0: Prüfungen mit dem Glühdraht — Allgemeines
(IEC 695-2-1/0:1994)

This European Standard was approved by CENELEC on 1996-12-09. CENELEC members are bound to comply with the CEN/CENELEC Internal Regulations which stipulate the conditions for giving this European Standard the status of a national standard without any alteration.

Up-to-date lists and bibliographical references concerning such national standards may be obtained on application to the Central Secretariat or to any CENELEC member.

This European Standard exists in three official versions (English, French, German). A version in any other language made by translation under the responsibility of a CENELEC member into its own language and notified to the Central Secretariat has the same status as the official versions.

CENELEC members are the national electrotechnical committees of Austria, Belgium, Denmark, Finland, France, Germany, Greece, Iceland, Ireland, Italy, Luxembourg, Netherlands, Norway, Portugal, Spain, Sweden, Switzerland and United Kingdom.

CENELEC

European Committee for Electrotechnical Standardization
Comité Européen de Normalisation Electrotechnique
Europäisches Komitee für Elektrotechnische Normung

Central Secretariat: rue de Stassart 35, B-1050 Brussels

Ref. No. EN 60695-2-1/0:1996 E

Foreword

The text of the International Standard IEC 695-2-1/0:1994, prepared by IEC TC 89, Fire hazard testing, was submitted to the formal vote and was approved by CENELEC as EN 60695-2-1/0 on 1996-12-09 without any modification.

Section 1 of EN 60695-2 supersedes HD 444.2.1 S1:1983 (IEC 695-2-1:1980), clause 7 of HD 441 S1:1983 (IEC 707:1981) and clause 6 of HD 541 S1:1991 (IEC 829:1988, modified).

The following dates were fixed:

— latest date by which the EN has to be implemented at national level by publication of an identical national standard or by endorsement (dop) 1997-12-01

— latest date by which the national standards conflicting with the EN have to be withdrawn (dow) 1997-12-01

Annexes designated "normative" are part of the body of the standard.

In this standard, Annex ZA is normative.

Annex ZA has been added by CENELEC.

Endorsement notice

The text of the International Standard IEC 695-2-1/0:1994 was approved by CENELEC as a European Standard without any modification.

NOTE The following editorial changes apply to the text of 695-2-1/0:1994:

Figure 2b — Test apparatus (examples)

Drawing: delete position number "11".

Legend, position 2: Replace "Weight adjustment screw" by "Height adjustment screw".

Contents

1 Scope

This sheet of IEC 695-2-1 specifies a glow-wire test to simulate the effect of thermal stresses which may be produced by heat sources such as glowing elements or overloaded resistors, for short periods, in order to assess the fire hazard by a simulation technique.

The test described in this standard is applicable, in the first place, to electrotechnical equipment, its sub-assemblies and components, but may also be applied to solid electrical insulating materials or other solid combustible materials.

2 Normative references

The following normative documents contain provisions which, through reference in this text, constitute provisions of this sheet of IEC 695-2-1. At the time of publication, the editions indicated were valid. All normative documents are subject to revision, and parties to agreements based on this sheet of IEC 695-2-1 are encouraged to investigate the possibility of applying the most recent editions of the normative documents indicated below. Members of IEC and ISO maintain registers of currently valid International Standards.

IEC 51, *Direct acting indicating analogue electrical-measuring instruments and their accessories.*

IEC 584-1:1977, *Thermocouples — Part 1: Reference tables.*

IEC 695-4:1993, *Fire hazard testing — Part 4: Terminology concerning fire tests.*

ISO/IEC Guide 52:1990, *Glossary of fire terms and definitions.*

ISO 4046:1978, *Paper, board, pulp and related terms — Vocabulary.*

3 Description of the test

This standard specifies the glow-wire test as a fire test using a non-flame ignition source.

The glow-wire is a specified loop of resistance wire, which is electrically heated to a specified temperature. The glow-wire is then brought into contact with the specimen under test.

A detailed description of each test is given in the relevant sheet of IEC 695-2-1.

This sheet of IEC 695-2-1 gives the detailed description of the test apparatus used in the other sheets.

4 Description of the test apparatus

The glow-wire consists of a specified loop of a nickel/chromium (80/20) wire, 4 mm in diameter; when forming the loop, care should be taken to avoid fine cracking at the tip.

A sheathed fine-wire thermocouple, having an overall nominal diameter of 0,5 mm and wires of, for example, NiCr and NiAl (type K) suitable for continuous operation at temperatures up to 960 °C with the welded point located inside the sheath, is used for measuring the temperature of the glow-wire. The sheath consists of a metal resistant to a temperature of at least 1 050 °C.

The glow-wire, with the thermocouple, is shown in Figure 1.

The thermocouple is arranged in a pocket hole, drilled in the tip of the glow-wire, as shown in detail Z of Figure 1. The thermal contact between the tip of the thermocouple and the end and the sides of the bored hole shall be maintained. Care should be taken to ensure that the thermocouple can follow the movement of the tip of the glow-wire caused by thermal elongation. The thermovoltages shall comply with IEC 584-1; the characteristics given in the standard are practically linear. The cold connection shall be kept in melting ice unless a reliable reference temperature is obtained by other means, for example by a compensation box.

The instrument for measuring the thermovoltage shall be accurate to within 1 % (for example, class 0,5 according to IEC 51).

The glow-wire is electrically heated; the current necessary for heating the tip to a temperature of 960 °C is between 120 A and 150 A.

The test apparatus shall be so designed that the glow-wire is kept in a horizontal plane and that it applies a force of 0,8 N to 1,2 N to the specimen, the force being maintained at this value when the glow-wire or the specimen is moved horizontally one towards the other over a distance of at least 7 mm.

Some typical examples of the test apparatus are shown in Figure 2a and Figure 2b.

To evaluate the possibility of spread of fire, for example by burning or glowing particles falling from the specimen, a specified layer is placed underneath the specimen.

In case the relevant specification does not specify a layer, the following layer shall be used: a piece of flat smooth white pinewood board, approximately 10 mm thick and in close contact with a single layer of wrapping tissue, is positioned at a distance of (200 ± 5) mm below the place where the glow-wire is applied to the specimen.

The white pinewood board or wrapping tissue may be replaced by other materials if they have been verified as equally suitable for the purpose.

NOTE Wrapping tissue as specified in 6.86 of ISO 4046: a soft and strong, lightweight wrapping paper of grammage generally between 12 g/m^2 and 30 g/m^2. It is primarily intended for protective packaging of delicate articles and for gift wrapping.

The apparatus shall be operated in a draught-free chamber which permits observation of the specimen. The volume of the chamber shall be such that oxygen depletion during the test does not significantly affect the test result. The specimen shall be mounted at least 100 mm from any surface of the chamber. After each test, the chamber shall be vented to remove safely air containing degradation products.

5 Severities

The temperature of the tip of the glow-wire and the duration of its application to the specimen shall be specified. Details are presented in sheets 1, 2, and 3 of IEC 695-2-1.

6 Calibration and verification of the temperature measuring system

6.1 Calibration

The calibration of the temperature measuring system shall be carried out at the temperature of 960 °C using as a standard method a foil of silver, 99,8 % pure, approximately 2 mm square and 0,06 mm thick, placed upon the upper surface of the tip of the glow-wire.

The glow-wire is heated and the temperature of 960 °C is reached when the foil melts.

6.2 Verification

It is necessary to verify periodically the continuing correct performance of the glow-wire tip temperature measuring system.

The system is considered to be operating satisfactorily if during further applications of the procedure detailed in **6.1** the temperature measuring system indicates a value within 5 K of 960 °C. If the indication is outside this range the temperature measuring system should be repaired or replaced.

After each verification it is necessary to clean any silver residue from the tip of the glow-wire, for example by means of a wire brush.

7 Conditioning

Before testing, the white pinewood board and the tissue paper are stored for 24 h in an atmosphere having a temperature between 15 °C and 35 °C and a relative humidity between 45 % and 75 %.

The specimen is conditioned as specified in sheets 1, 2, and 3 of IEC 695-2-1.

8 Initial measurements

Details are specified in sheets 1, 2, and 3 of IEC 695-2-1.

9 Test procedure

Warning note:

Precautions shall be taken to safeguard the health of personnel conducting tests against:

— the risks of explosion or fire;

— the inhalation of smoke and/or toxic products;

— the toxic residues.

9.1 The specimen is so fixed that heat losses due to the supporting or fixing means are insignificant.

The specimen is so arranged that:

— the surface in contact with the tip of the glow-wire is vertical;

— the tip of the glow-wire is applied to the part of the surface of the specimen which is likely to be subjected to thermal stresses in normal use.

9.2 Before each test, it is necessary to clean the tip of the glow-wire of any residue of previously tested material, for example by means of a wire brush.

9.3 The glow-wire is electrically heated to the temperature specified (see clause **5**), which is measured by means of the calibrated thermocouple. Before starting the test, care shall be taken to ensure that this temperature and the heating current are constant for a period of at least 60 s and that heat radiation does not influence the specimen during this period or during the calibration by providing an adequate distance or by using an appropriate screen.

9.4 The tip of the glow-wire is then brought into contact with the specimen for the specified time (see clause **5**). The heating current is held constant during this period. After this period, the glow-wire and the specimen are slowly separated, avoiding any further heating of the specimen and any movement of air which might affect the result of the test.

The movement of the tip of the glow-wire into the specimen when pressed to it shall be mechanically limited to 7 mm.

If a specimen passes the test by virtue of most of the flaming material of the specimen being withdrawn with the glow-wire, then this shall be reported in the test report.

9.5 The number of specimens is specified in sheets 1, 2, and 3 of IEC 695-2-1.

10 Observations and measurements

Details are specified in sheets 1, 2, and 3 of IEC 695-2-1.

11 Evaluation of test results

Details are specified in sheets 1, 2, and 3 of IEC 695-2-1.

12 Information to be given in the relevant specification

The information shall include:

— the number of specimens;

— the conditioning of the specimen and initial measurements;

— the layer to be used;

— the surface to be tested and the point of application;

— the severities;

— the observations and measurements;

— the evaluation criteria.

Details are specified in sheets 1, 2 and 3 of IEC 695-2-1.

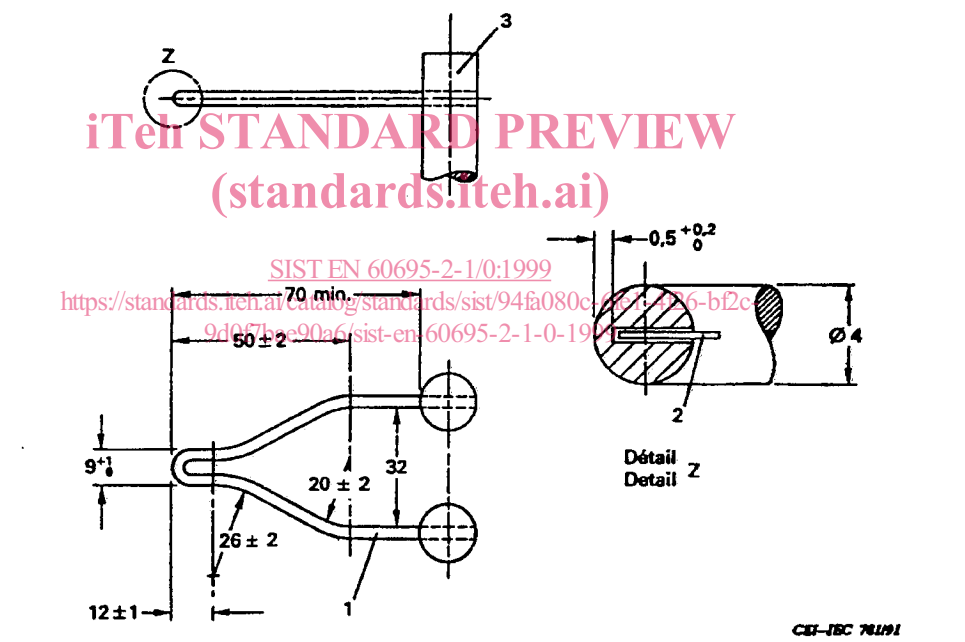

Dimensions en millimètres *Dimensions in millimetres*

1 Fil incandescent brasé à 3
Glow-wire hard soldered at 3

2 Thermocouple – noter l'ajustement serré
note close fitting

3 Plot
Stud

Figure 1 — Glow-wire and position of the thermocouple

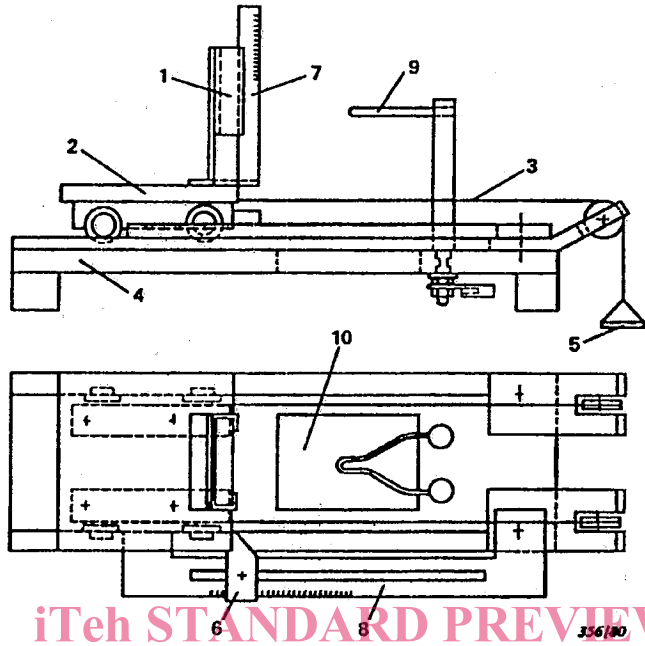

Dimensions en millimètres *Dimensions in millimetres*

1 Support du spécimen
Positioning clamp

2 Chariot
Carriage

3 Câble de tension
Tensioning cord

4 Bâti
Base plate

5 Poids
Weight

6 Butée réglable
Stop

7 Echelle de mesure de flamme
Scale to measure height of flame

8 Echelle de mesure de pénétration
Scale for penetration

9 Fil incandescent (figure 1)
Glow-wire (figure 1)

10 Bâti pour des particules tombant du spécimen
Cut-out in base plate for particules falling from the specimen

Figure 2a

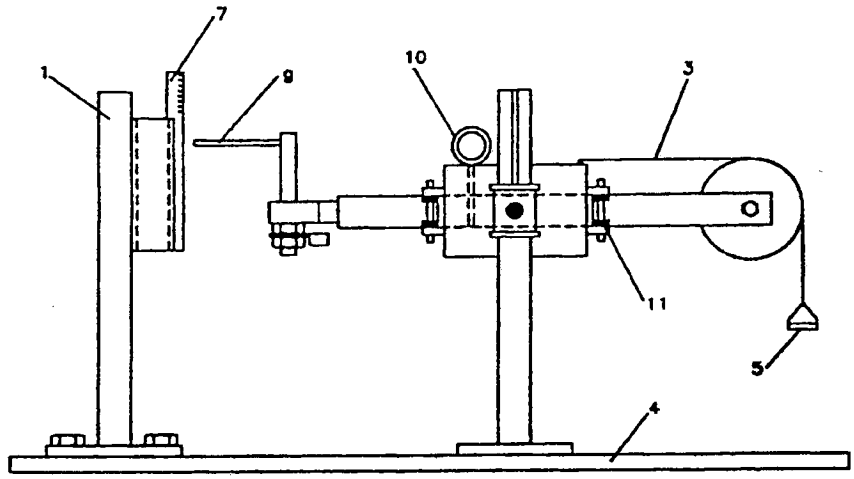

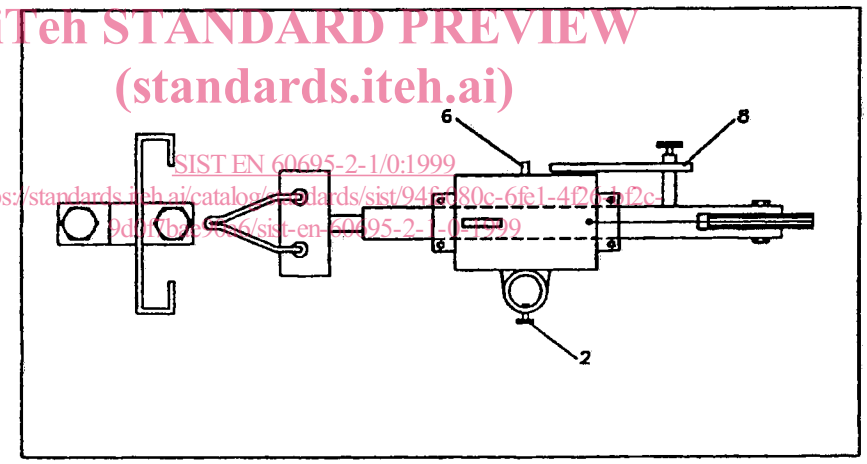

CEI–IEC 782/91

Dimensions en millimètres — *Dimensions in millimetres*

1 Support du spécimen
Positioning clamp

2 Vis de réglage en hauteur
Weight adjustment screw

3 Câble de tension
Tensioning cord

4 Bâti
Base plate

5 Poids
Weight

6 Butée réglable
Stop

7 Echelle de mesure de flamme
Scale to measure height of flame

8 Réglage de pénétration
Penetration adjustment

9 Fil incandescent
Glow-wire

10 Cheville d'arrêt
Restraining pin

Figure 2b — Test apparatus (examples)