ETSI TS 105 200-2-2 V1.3.1 (2019-12)

TECHNICAL SPECIFICATION

Access, Terminals, Transmission and Multiplexing (ATTM);
Energy management; Operational infrastructures;
Implementation of Global KPIs;
Part 2: Specific requirements;
Sub-part 2: Fixed broadband access networks

iTeh STANDARD PREVIEW
(standards.iteh.ai)
Full standard:
https://standards.iteh.ai/catalog/standards/sist/6fafa6ba-9b89-4a53-a8ae-85d5c2421698/etsi-ts-105-200-2-2-v1.3.1-2019-12

Reference
RTS/ATTM-0248

Keywords
broadband, energy efficiency,
energy management

ETSI

650 Route des Lucioles
F-06921 Sophia Antipolis Cedex - FRANCE

Tel.: +33 4 92 94 42 00 Fax: +33 4 93 65 47 16

Siret N° 348 623 562 00017 - NAF 742 C
Association à but non lucratif enregistrée à la
Sous-Préfecture de Grasse (06) N° 7803/88

iTeh STANDARD PREVIEW
(standards.iteh.ai)
Full standard:
https://standards.iteh.ai/catalog/standards/sist/e6e3ba-9b89-4a5-aaec-9557c242/etsi-ts-105-200-2-2-v1.3.1-2019-12

Important notice

The present document can be downloaded from:
http://www.etsi.org/standards-search

The present document may be made available in electronic versions and/or in print. The content of any electronic and/or print versions of the present document shall not be modified without the prior written authorization of ETSI. In case of any existing or perceived difference in contents between such versions and/or in print, the prevailing version of an ETSI deliverable is the one made publicly available in PDF format at www.etsi.org/deliver.

Users of the present document should be aware that the document may be subject to revision or change of status.
Information on the current status of this and other ETSI documents is available at
https://portal.etsi.org/TB/ETSIDeliverableStatus.aspx

If you find errors in the present document, please send your comment to one of the following services:
https://portal.etsi.org/People/CommiteeSupportStaff.aspx

Copyright Notification

No part may be reproduced or utilized in any form or by any means, electronic or mechanical, including photocopying and microfilm except as authorized by written permission of ETSI.
The content of the PDF version shall not be modified without the written authorization of ETSI.
The copyright and the foregoing restriction extend to reproduction in all media.

© ETSI 2019.
All rights reserved.

DECT™, **PLUGTESTS™**, **UMTS™** and the ETSI logo are trademarks of ETSI registered for the benefit of its Members.
3GPP™ and **LTE™** are trademarks of ETSI registered for the benefit of its Members and of the 3GPP Organizational Partners.
oneM2M™ logo is a trademark of ETSI registered for the benefit of its Members and of the oneM2M Partners.
GSM® and the GSM logo are trademarks registered and owned by the GSM Association.

Contents

Intellectual Property Rights 7

Foreword 7

Modal verbs terminology 7

Introduction 8

1 Scope 9

2 References 9
2.1 Normative references 9
2.2 Informative references 9

3 Definition of terms, symbols and abbreviations 10
3.1 Terms 10
3.2 Symbols 10
3.3 Abbreviations 10

4 Global KPIs of ETSI EN 305 200-2-2 11
4.1 Fixed broadband access networks 11
4.2 KPIs for energy management 11
4.2.1 Global KPI (KPI_{EM}) for fixed access networks 11
4.2.2 Objective KPIs 12
4.2.2.1 Energy consumption (KPI_{EC}) 12
4.2.2.1.1 General 12
4.2.2.1.2 CP-powered equipment within the calculation of KPI_{EC} 13
4.2.2.1.3 Measurement (and estimation) of total energy consumption 14
4.2.2.2 Task effectiveness (KPI_{TE}) 15
4.2.2.2.1 General 15
4.2.2.2.2 Measurement of data volumes 16
4.2.2.3 Renewable energy (KPI_{REN}) 17
4.2.2.3.1 General 17
4.2.2.3.2 Measurement of renewable energy consumption 17

5 Collection of data 18
5.1 General 18
5.2 Estimation of energy consumption and renewable content 19
5.2.1 Energy consumption 19
5.2.1.1 Overview 19
5.2.1.2 Energy bills 20
5.2.1.3 Meters installed by the operator (smart metering) 20
5.2.1.4 Energy consumption provided by the equipment 20
5.2.1.5 Network and location sharing 21
5.2.2 Renewable energy 21
5.3 Data related to traffic 21
5.4 Clarification of data 21
5.5 Treatment of data types 22

6 Trend analysis 22
6.1 Overview 22
6.2 Renewable energy sources 24
6.3 Intelligent management 24
6.4 Summary of possible actions to improve KPI_{EM} 25
6.5 Reporting of trend data 25

7 Reporting templates 25

Annex A (informative): Fixed Access Networks and Energy 27

A.1 Network energy consumption and supply 27

A.2 Energy consumption trends 27

iTeh STANDARD PREVIEW
(standards.iteh.ai)
Full standard:
https://standards.iteh.ai/catalog/standards/sist/6fafc3ba-9b89-4a53-a8ae-85d5c2401698/etsi-ts-105-200-2-2-v1.3.1-2019-12

Annex B (informative): Change History 31
History 32

iTeh STANDARD PREVIEW
(standards.iteh.ai)
Full standard:
https://standards.iteh.ai/catalog/standards/sist/6fafc3ba-9b89-4a53-a8ae-85d5c2421698/etsi-ts-105-200-2-2-v1.3.1-2019-12

List of figures

Figure 1: Fixed access network implementations....11
Figure 2: Data collection architecture....18
Figure 3: Data processing and reporting architecture....19
Figure 4: Schematic of fixed access network energy consumption....19
Figure 5: Growth of traffic data rate per W....23
Figure A.1: Trends in data volume....28
Figure A.2: Trends in data volume increase (annual)....28
Figure A.3: Trends in energy consumption and sourcing....29
Figure A.4: Trends in energy consumption and sourcing....29
Figure A.5: Trends in KPI_{TE}....30
Figure A.6: Trends in KPI_{TE} increase (annual)....30

iTeh STANDARD PREVIEW
(standards.iteh.ai)
Full standard:
https://standards.iteh.ai/catalog/standards/sist/6fafc3ba-9b89-4a53-a8ae-85d5c2421698/etsi-ts-105-200-2-2-v1.3.1-2019-12

List of tables

Table 1: Techniques for improvement of KPI_{EM} 25

Table 2: Template for fixed network report 26

Table A.1: Renewable energy source solutions 27

iTeh STANDARD PREVIEW
(standards.iteh.ai)
Full standard:
https://standards.iteh.ai/catalog/standards/sist/6fafc3ba-9b89-4a53-a8ae-85d5c2421698/etsi-ts-105-200-2-2-v1.3.1-2019-12

Intellectual Property Rights

Essential patents

IPRs essential or potentially essential to normative deliverables may have been declared to ETSI. The information pertaining to these essential IPRs, if any, is publicly available for **ETSI members and non-members**, and can be found in ETSI SR 000 314: *"Intellectual Property Rights (IPRs); Essential, or potentially Essential, IPRs notified to ETSI in respect of ETSI standards"*, which is available from the ETSI Secretariat. Latest updates are available on the ETSI Web server (https://ipr.etsi.org/).

Pursuant to the ETSI IPR Policy, no investigation, including IPR searches, has been carried out by ETSI. No guarantee can be given as to the existence of other IPRs not referenced in ETSI SR 000 314 (or the updates on the ETSI Web server) which are, or may be, or may become, essential to the present document.

Trademarks

The present document may include trademarks and/or tradenames which are asserted and/or registered by their owners. ETSI claims no ownership of these except for any which are indicated as being the property of ETSI, and conveys no right to use or reproduce any trademark and/or tradename. Mention of those trademarks in the present document does not constitute an endorsement by ETSI of products, services or organizations associated with those trademarks.

Foreword

This Technical Specification (TS) has been produced by ETSI Technical Committee Access, Terminals, Transmission and Multiplexing (ATTM).

The present document is part 2, sub-part 2 of a multi-part deliverable covering the Energy management; Operational infrastructures; Implementation of Global KPIs, as identified below:

ETSI EN 305 200-1: "General requirements";

ETSI TS 105 200-2: "Specific requirements":

Sub-part 1: "ICT Sites";

Sub-part 2: "Fixed broadband access networks";

Sub-part 3: "Mobile broadband access networks";

Sub-part 4: "Cable Access Networks";

ETSI TS 105 200-3: "ICT sites";

ETSI EN 305 200-4: "Design assessments".

NOTE: Part 2 of this series has also been produced as EN and ES.

iTeh STANDARD PREVIEW
(standards.iteh.ai)
Full standard:
https://standards.iteh.ai/catalog/standards/sist/6fafc3ba-9b89-4e53-a8ae-85d5c2421698/etsi-ts-105-200-2-2-v1.3.1-2019-12

Modal verbs terminology

In the present document "**shall**", "**shall not**", "**should**", "**should not**", "**may**", "**need not**", "**will**", "**will not**", "**can**" and "**cannot**" are to be interpreted as described in clause 3.2 of the ETSI Drafting Rules (Verbal forms for the expression of provisions).

"**must**" and "**must not**" are **NOT** allowed in ETSI deliverables except when used in direct citation.

Introduction

ICT energy needs and costs will continue to increase in the future, while new fixed generations will be deployed and will introduce new active dedicated equipment in the global network architecture.

In this context, and to reflect environmental aspects of sustainability, it is essential for telecommunications network operators to implement effective general engineering of fixed broadband networks and sites provisioning, managing or using those networks (i.e. ICT sites) in order to respond to critical issues of energy consumption. To guide this process, it is essential that metrics are defined that enable energy usage to be managed more effectively.

The Global Key Performance Indicators (KPIs) of the ETSI EN 305 200 series [1] address operational infrastructures and do not consider design or operation of individual components comprising those infrastructures.

The present document specifies the deployment of Global KPIs for energy management (*KPI*$_{EM}$) for the fixed access networks of broadband deployment specified in ETSI EN 305 200-2-2 [2].

The fixed access network described in ETSI EN 305 200-2-2 [2] includes all the active components or parts of the access network.

iTeh STANDARD PREVIEW
(standards.iteh.ai)
Full standard:
https://standards.iteh.ai/catalog/standards/sist/6fafc3ba-9b89-4a53-a8ae-85d5c2421698/etsi-ts-105-200-2-2-v1.3.1-2019-12

1 Scope

The reporting of Global KPIs in accordance with ETSI EN 305 200-2-2 [2] requires the collection of data to enable the calculation of the following aspects:

- Objective KPI relating to task efficiency (KPI_{TE}) based on *data_volume* and total energy consumption (KPI_{EC}).
- Objective KPI relating to the use of renewable energy (KPI_{REN}).

The present document supports the requirements of ETSI EN 305 200-2-2 [2] providing a framework for, and detailing, the implementation procedures including any necessary techniques for estimation of energy consumption together with clarification and treatment of different types of data volume.

2 References

2.1 Normative references

References are either specific (identified by date of publication and/or edition number or version number) or non-specific. For specific references, only the cited version applies. For non-specific references, the latest version of the referenced document (including any amendments) applies.

Referenced documents which are not found to be publicly available in the expected location might be found at https://docbox.etsi.org/Reference/.

NOTE: While any hyperlinks included in this clause were valid at the time of publication, ETSI cannot guarantee their long term validity.

The following referenced documents are necessary for the application of the present document.

[1] ETSI EN 305 200 series: "Access, Terminals, Transmission and Multiplexing (ATTM); Energy management; Operational infrastructures; Global KPIs".

[2] ETSI EN 305 200-2-2: "Access, Terminals, Transmission and Multiplexing (ATTM); Energy management; Operational infrastructures; Global KPIs; Part 2: Specific requirements; Sub-part 2: Fixed broadband access networks".

iTeh STANDARD PREVIEW
(standards.iteh.ai)
Full standard:
https://standards.iteh.ai/catalog/standards/sist/6fafc3be-9b89-4a53-a8ae-8505c2421696/etsi-ts-105-200-2-2-v1.3.1-2019-12

2.2 Informative references

References are either specific (identified by date of publication and/or edition number or version number) or non-specific. For specific references, only the cited version applies. For non-specific references, the latest version of the referenced document (including any amendments) applies.

NOTE: While any hyperlinks included in this clause were valid at the time of publication, ETSI cannot guarantee their long term validity.

The following referenced documents are not necessary for the application of the present document but they assist the user with regard to a particular subject area.

Not applicable.

3 Definition of terms, symbols and abbreviations

3.1 Terms

For the purposes of the present document, the terms given in ETSI EN 305 200-2-2 [2] and the following apply:

Access Gateway (AG): gateway that interworks a significant number of analogue lines to a packet network

downstream: relative location in the fixed access network in the direction of Network Termination Point

fixed access network: access network provided by telecommunications operators providing direct connection (e.g. by metallic, optical fibre or fixed wireless or community WiFi) to customer premises where the User Equipment (UE) or the Access Gateway (AG) is connected directly by a fixed link

NOTE: This modifies and updates the definition of ETSI EN 305 200-2-2 [2].

Fixed Wireless Access (FWA): means of providing internet connectivity that uses wireless network technology rather than fixed lines

Management Information Base (MIB): database allowing management of ICT devices using Simple Network Management Protocol (SNMP)

Multi-access Edge Computing (MEC): network architecture that supports increases in data processing and storage at the edge of a fixed access network (closer to end-user) to reduce latency

Other Licensed Operator (OLO): provider of wireless communications services that owns or controls all the elements necessary to sell and deliver services to an end user including wireline network infrastructure, backhaul infrastructure, billing, customer care, provisioning computer systems and marketing and repair organizations

upstream: relative location in the fixed access network in the direction of an operator site

iTeh STANDARD PREVIEW
(standards.iteh.ai)
Full standard:
https://standards.iteh.ai/catalog/standards/sist/6fafc3ba-9b89-4a53-a8ae-85d5c2221698/etsi-ts-105-200-2-2-v1.3.1-2019-12

3.2 Symbols

For the purposes of the present document, the symbols given in ETSI EN 305 200-2-2 [2] apply.

3.3 Abbreviations

For the purposes of the present document, the abbreviations given in ETSI EN 305 200-2-2 [2] and the following apply:

AG	Access Gateway
ATM	Automated Teller Machine
FTTdp	Fiber To The distribution point
FWA	Fixed Wireless Access
FXS	Foreign eXchange Station
LL	Leased Line
MEC	Multi-access Edge Computing
MIB	Management Information Base
OLO	Other Licensed Operator
ONT	Optical Network Termination
PoS	Point of Sale
PSTN	Public Switched Telephone Network
SNMP	Simple Network Management Protocol
UPS	Uninterruptible Power Supply
VoIP	Voice over Internet Protocol

4 Global KPIs of ETSI EN 305 200-2-2

4.1 Fixed broadband access networks

The network schematic used in the present document is shown in Figure 1 (taken from of ETSI EN 305 200-2-2 [2]).

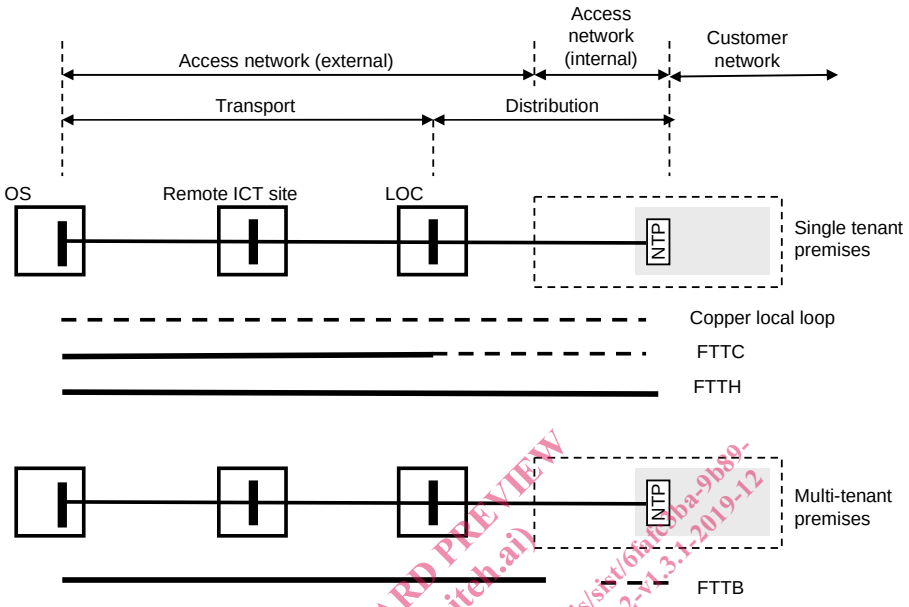

Figure 1: Fixed access network implementations

iTeh STANDARD PREVIEW (standards.iteh.ai) Full standard: https://standards.iteh.ai/catalog/standards/sist/6fafc8ba-9b89-4a53-a8ae-85d5a2421698/etsi-ts-105-200-2-2-v1.3.1-2019-12

Within the Fixed Access Network (FAN), the term Network Distribution Node (NDN) is employed to describe a variety of aggregations of Network Telecommunications Equipment (NTE) at locations between the Operator Site (OS) and the Terminal Equipment (TE) in the Customer Premises (CP).

The Last Operator Connection point (LOC) is shown as a specific example of an NDN and is the closest NDN containing NTE to a CP.

Figure 1 shows certain NDNs within dashed boxes to indicate that they are:

- optional;
- not restricted in number to the configurations shown.

4.2 KPIs for energy management

4.2.1 Global KPI (KPI_{EM}) for fixed access networks

From ETSI EN 305 200-2-2 [2], KPI_{EM} is a combination of two separate KPIs, in a common assessment period, as follows:

1) the Objective KPI for task effectiveness expressed as KPI_{TE} (see clause 4.2.2.2);

2) the Objective KPI for renewable energy contribution expressed as KPI_{REN} (see clause 4.2.2.3);

and both of these Objective KPIs incorporate a third Objective KPIs for energy consumption expressed as KPI_{EC} (see clause 4.2.2.1).