INTERNATIONAL STANDARD

# ISO 18084

Second edition
2011-09-15

# Press tools for tablets — Punches and dies

*Outillage de presse pour comprimés — Poinçons et matrices*



Reference number
ISO 18084:2011(E)

ISO copyright office
Case postale 56 • CH-1211 Geneva 20
Tel. + 41 22 749 01 11
Fax + 41 22 749 09 47
E-mail copyright@iso.org
Web www.iso.org

Published in Switzerland

# Contents

Page

## Foreword

ISO (the International Organization for Standardization) is a worldwide federation of national standards bodies (ISO member bodies). The work of preparing International Standards is normally carried out through ISO technical committees. Each member body interested in a subject for which a technical committee has been established has the right to be represented on that committee. International organizations, governmental and non-governmental, in liaison with ISO, also take part in the work. ISO collaborates closely with the International Electrotechnical Commission (IEC) on all matters of electrotechnical standardization.

International Standards are drafted in accordance with the rules given in the ISO/IEC Directives, Part 2.

The main task of technical committees is to prepare International Standards. Draft International Standards adopted by the technical committees are circulated to the member bodies for voting. Publication as an International Standard requires approval by at least 75 % of the member bodies casting a vote.

Attention is drawn to the possibility that some of the elements of this document may be the subject of patent rights. ISO shall not be held responsible for identifying any or all such patent rights.

ISO 18084 was prepared by Technical Committee ISO/TC 29, *Small tools*, Subcommittee SC 8, *Tools for pressing and moulding*.



This second edition cancels and replaces the first edition (ISO 18084:2005), of which it constitutes a minor revision. In particular, key item 5 and key item 34 of Figure 1 and detail X of Figure 7 have been corrected.

# Press tools for tablets — Punches and dies

## 1 Scope

This International Standard specifies the main dimensions, tolerances and characteristics of punches and dies for all kinds of tablets.

This International Standard deals with measures which are relevant for the interchangeability of the press punches between the different tableting machines of various manufacturers.

## 2 Normative references

The following referenced documents are indispensable for the application of this document. For dated references, only the edition cited applies. For undated references, the latest edition of the referenced document (including any amendments) applies.

ISO 2768-1, *General tolerances — Part 1: Tolerances for linear and angular dimensions without individual tolerance indications*



## 3 Nomenclature

See Figures 1 and 2.

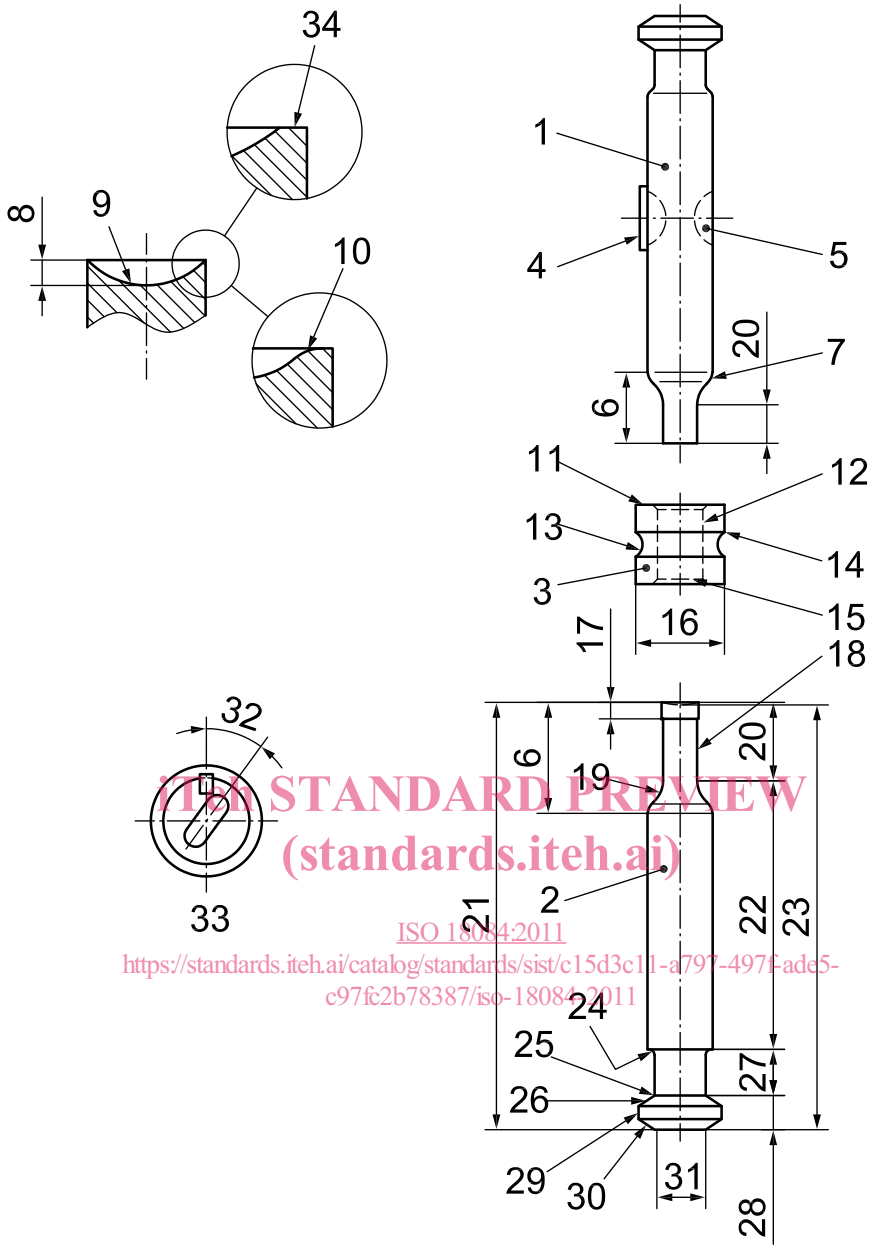




**Key**

1 upper punch
2 lower punch
3 die
4 key
5 keyway
6 stem (tip to full barrel)
7 barrel-to-stem chamfer
8 cup depth
9 tip face
10 blended land
11 face
12 bore
13 die groove
14 protection radius or shoulder
15 chamfer or radius
16 outer diameter
17 tip straight
18 relief
19 barrel-to-stem radius
20 working length of the tip
21 overall length
22 barrel
23 working length
24 barrel-to-neck radius
25 neck-to-head radius
26 inside head angle
27 neck under head
28 head
29 head outer diameter
30 outside head angle
31 head flat
32 key orientation angle
33 upper punch face key position
34 land

**Figure 1 — Punch and die terminology**

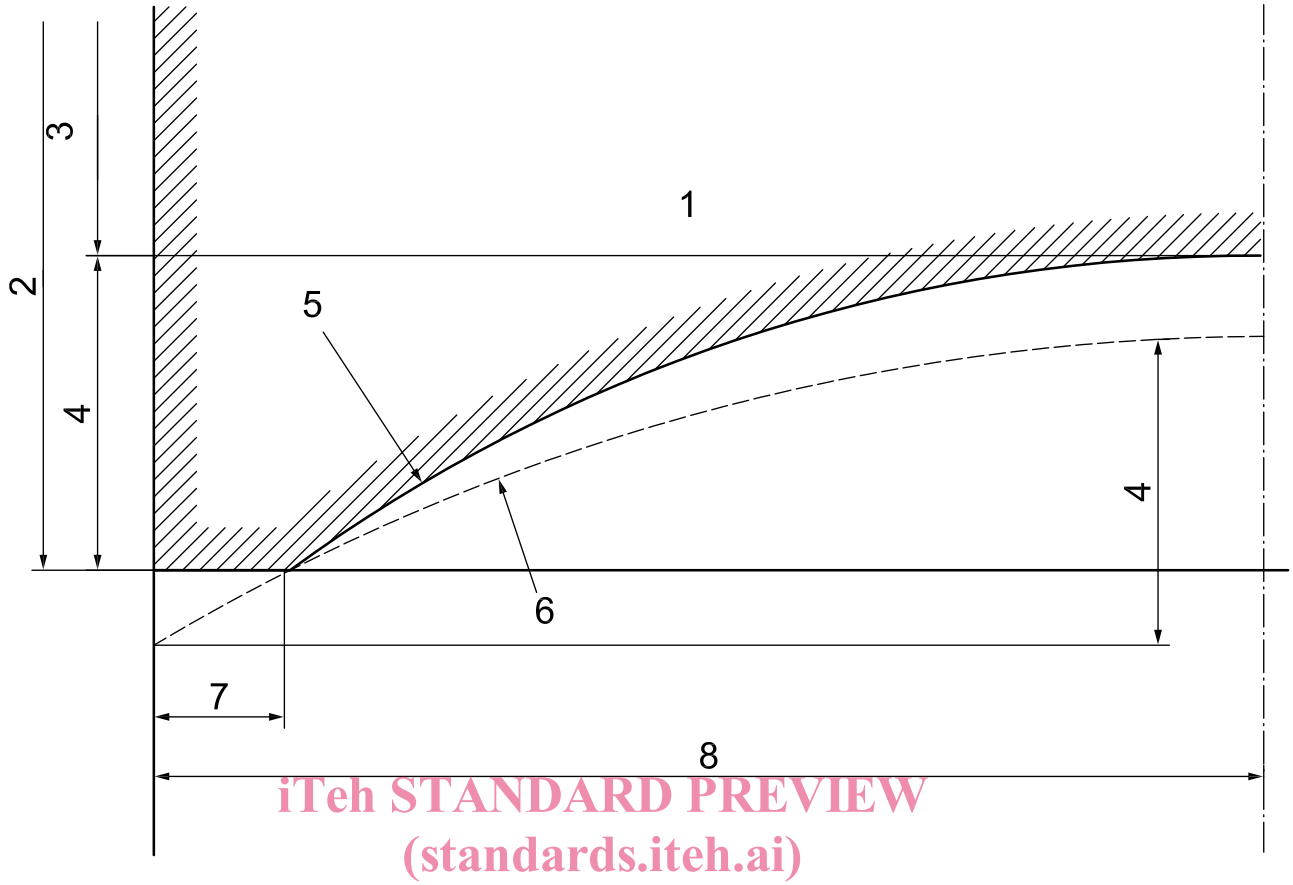




**Key**

| | | | | | |
|---|---|---|---|---|---|
| 1 | punch | 4 | depth cup | 7 | land |
| 2 | overall length | 5 | practical radius | 8 | tip face diameter |
| 3 | working length | 6 | nominal radius | | |



**Figure 2 — Terminology related to tip face profile**

## 4 Dimensions and tolerances

### 4.1 Punches

#### 4.1.1 Upper punches

##### 4.1.1.1 Upper punches without key

The dimensions and tolerance of upper punches without key shall be in accordance with the indications of Figure 3 and Table 1. The dimensions and tolerance of punch head shall be in accordance with the indications of Annex A.

##### 4.1.1.2 Upper punches with key

The dimensions and tolerance of upper punches with key shall be in accordance with the indications of Figure 4 and Table 1. The dimensions and tolerance of punch head shall be in accordance with the indications of Annex A.

Dimensions in millimetres,
Surface roughness values in micrometres
General tolerance: ISO 2768-m

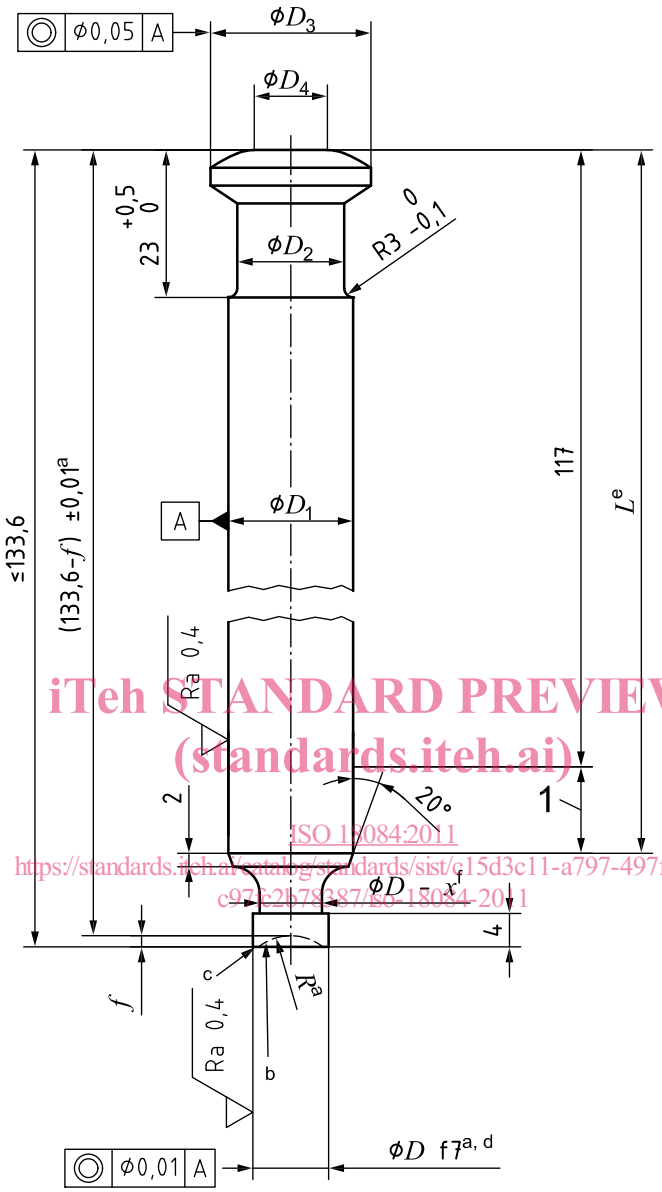




**Key**

1 dust cup place

a The values of $D$, $R$ and $(133,6 - f) \pm 0,01$ shall be defined by the user.

b The appearance of the cup radius and the land shall correspond to a polished mirror (i.e. 0,025 µm $\leq Ra \leq$ 0,10 µm).

c The land (see Figure 2, key item 7) varies according to $D$ and the tablet dimensions, and should be equal to:

— 0,05 for $D < 5$
— 0,1 for $5 \leq D < 20$
— 0,2 for $D \geq 20$.

d For shape tooling, the tolerance of all dimensions of the tip should correspond to f7 applied to the largest dimension.

e The values of $L$ shall be subject to agreement between the manufacturer and the user.

f $x$ shall be subject to agreement between the manufacturer and the user.

**Figure 3 — Upper punches without key**

Dimensions in millimetres,
Surface roughness values in micrometres
General tolerance: ISO 2768-m

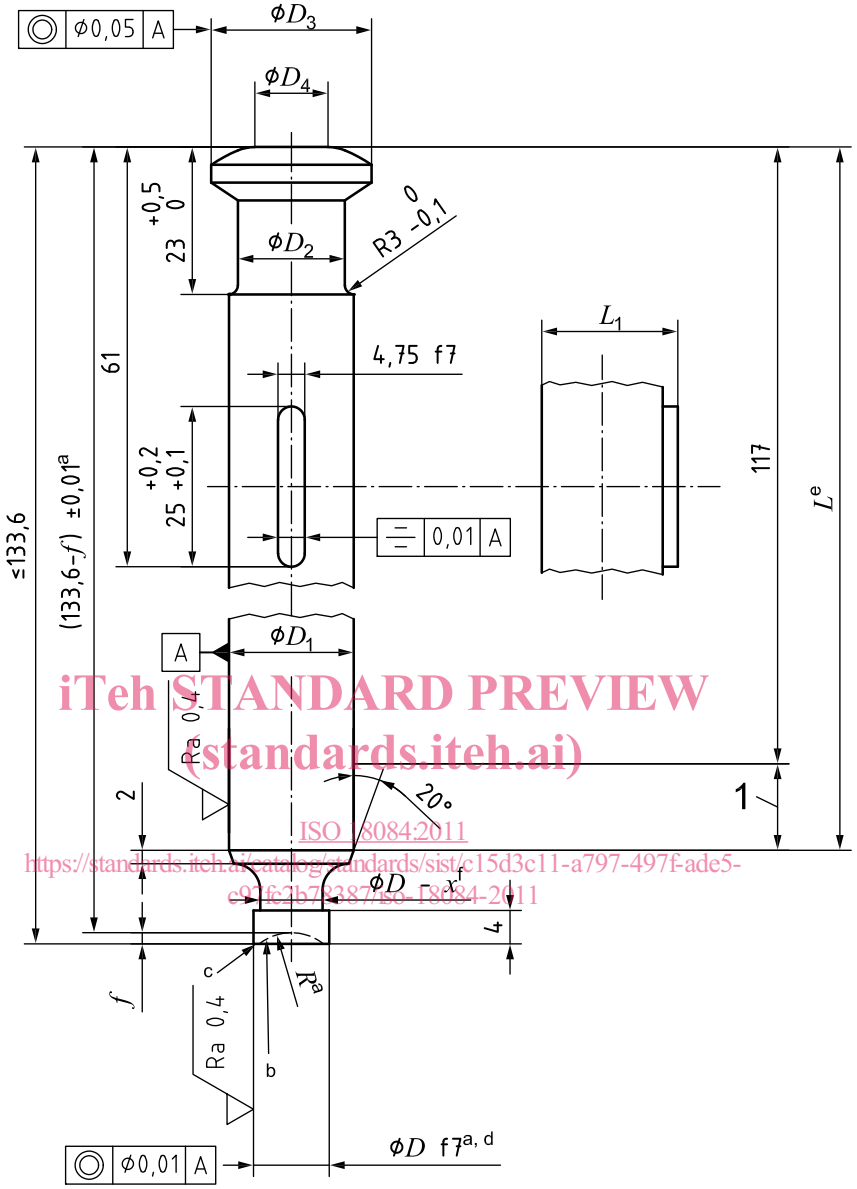




**Key**

1 dust cup place

a The values of $D$, $R$ and (133,6 − $f$) ± 0,01 shall be defined by the user.

b The appearance of the cup radius and the land shall correspond to a polished mirror (i.e. 0,025 µm ≤ $Ra$ ≤ 0,10 µm).

c The land (see Figure 2, key item 7) varies according to $D$ and the tablet dimensions, and shall be equal to:

— 0,05 for $D < 5$
— 0,1 for $5 \leq D < 20$
— 0,2 for $D \geq 20$.

d For shape tooling, the tolerance of all dimensions of the tip should correspond to f7 applied to the largest dimension.

e The values of $L$ shall be subject to agreement between the manufacturer and the user.

f $x$ shall be subject to agreement between the manufacturer and the user.

**Figure 4 — Upper punches with key**

**Table 1 — Dimensions of upper punches**

Dimensions in millimetres

| $D_1$ h6 | $D_2$ $^{0}_{-0,1}$ | $D_3$ $^{0}_{-0,1}$ | $D_4$ ± 0,2 | $L_1$ $^{0}_{-0,2}$ |
|---|---|---|---|---|
| 19 | 15,8 | 25,27 | 9,6 | 20,7 |
| 25,35 | 22 | 31,6 | 16 | 27 |

### 4.1.2 Lower punches

#### 4.1.2.1 Lower punches without key

The dimensions and tolerance of lower punches without key shall be in accordance with the indications of Figure 5 and Table 2. The dimensions and tolerance of punch head shall be in accordance with the indications of Annex A.

#### 4.1.2.2 Lower punches with key

The dimensions and tolerance of lower punches with key shall be in accordance with the indications of Figure 6 and Table 2. The dimensions and tolerance of punch head shall be in accordance with the indications of Annex A.

Dimensions in millimetres,
Surface roughness values in micrometres
General tolerance: ISO 2768-m

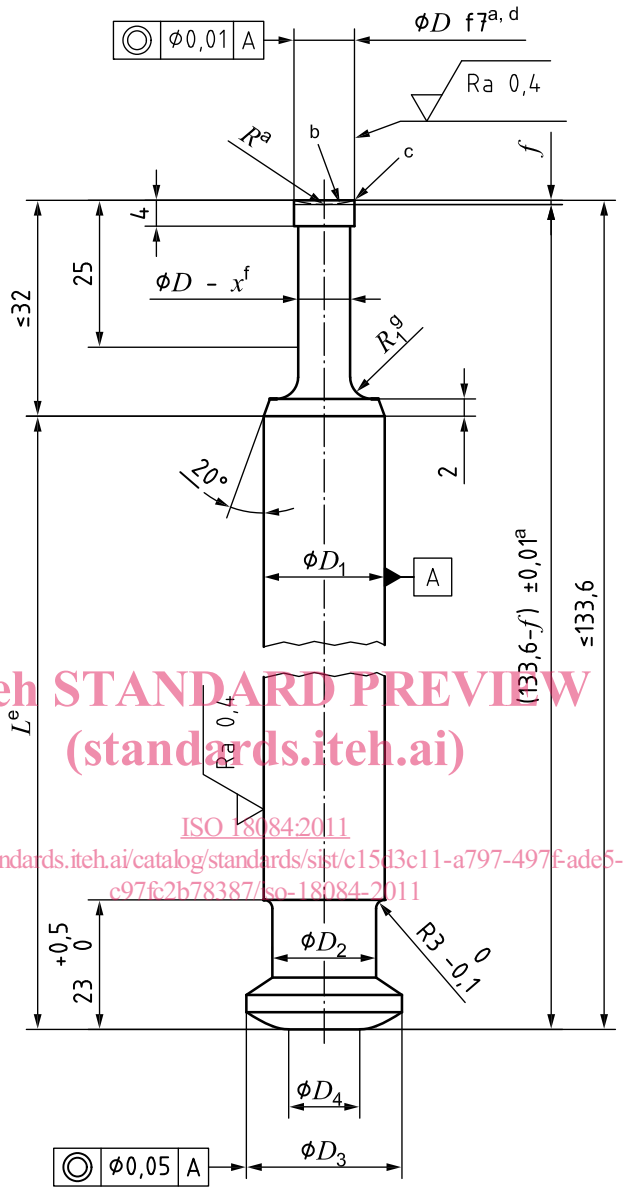




[a] The values of $D$, $R$ and (133,6 – $f$) ± 0,01 shall be defined by the user.

[b] The appearance of the cup radius and the land shall correspond to a polished mirror (i.e. 0,025 µm ≤ $Ra$ ≤ 0,10 µm).

[c] The land (see Figure 2, key item 7) varies according to $D$ and the tablet dimensions, and should be equal to:

— 0,05 for $D < 5$
— 0,1 for $5 \leq D < 20$
— 0,2 for $D \geq 20$.

[d] For shape tooling, the tolerance of all dimensions of the tip should correspond to f7 applied to the largest dimension.

[e] The values of $L$ shall be subject to agreement between the manufacturer and the user.

[f] $x$ shall be subject to agreement between the manufacturer and the user.

[g] The value of the radius varies according to diameter $D$ and the form.

**Figure 5 — Lower punches without key**